Annex 2

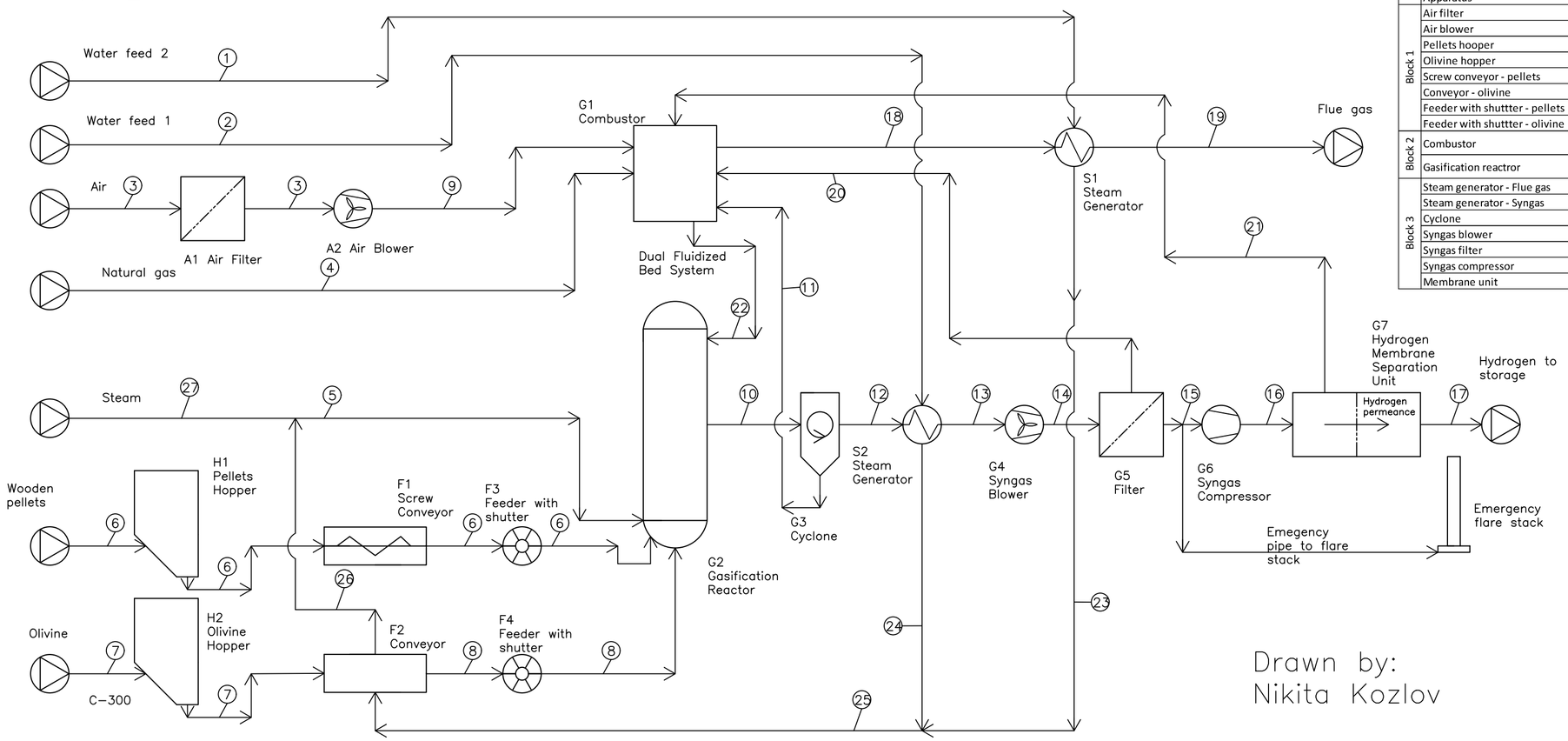

	Apparatus	Code
Block 1	Air filter	A1
	Air blower	A2
	Pellets hooper	H1
	Olivine hopper	H2
	Screw conveyor - pellets	F1
	Conveyor - olivine	F2
	Feeder with shuttter - pellets	F3
	Feeder with shuttter - olivine	F4
Block 2	Combustor	G1
	Gasification reactror	G2
Block 3	Steam generator - Flue gas	S1
	Steam generator - Syngas	S2
	Cyclone	G3
	Syngas blower	G4
	Syngas filter	G5
	Syngas compressor	G6
	Membrane unit	G7

Drawn by:
Nikita Kozlov

Stream	1	2	3	4	5	6	7	8	9	10	11	12	13	14
Desctiption	Water feed 1 [m3/h]	Water feed 2 [m3/h]	Air feed [Nm3/h]	Natural gas feed [Nm3/h]	Steam feed	Wooden pellets feed (kg/h)	Olivine feed	Pre-heated olivine	Air feed	Hot syngas from reactor (with olivine+tars) [Nm3/h]	Olivine+Tars to Combustor [kg/h]	Hot syngas from reactor (w/out olivine+tars) [Nm3/h]	Cooled syngas [Nm3/h]	Cooled syngas [Nm3/h]
Flow	310.6677698	576.8441869	1120	16.71641791	1000	1000	89.7	89.7	1120	1300	89.7	1300	1300	1300
Temperature [C]	20	20	20	20	345	20	20	250		750	750	750	300	300
Pressure [kPa]	110	110	101.325	110	110	101.325	101.325	101.325	120	120	120	120	120	120
Concentration [mol%]														
O2	-	-	0.21	-	-	-	-	-	0.21		-	-	-	-
N2	-	-	0.79	-	-	-	-	-	0.79		-	-	-	-
CO	-	-	-	-	-	-	-	-		0.13	-	0.13	0.13	0.13
CO2	-	-	-	-	-	-	-	-		0.289	-	0.289	0.289	0.289
CH4	-	-	-	-	-	-	-	-		0.064	-	0.064	0.064	0.064
H2	-	-	-	-	-	-	-	-		0.494	-	0.494	0.494	0.494
H2O	-	-	-	-	-	-	-	-		-	-	-	-	-
CxHy	-	-	-	-	-	-	-	-		0.023	-	0.023	0.023	0.023
Tar	-	-	-	-	-	-	-	-		89.7	-	0	0	0

Stream	15	16	17	18	19	20	21	22	23	24	25	26	27	
Desctiption	Filtered syngas [Nm3/h]	Compressed syngas [Nm3/h]	Hydrogen (99.995% purity) [Nm3/h]	Hot flue gas [Nm3/h]	Cooled flue gas [Nm3/h]	Filter residues	Hydrogen-free Syngas [Nm3/h]	Heated olivine back to Reactor	Steam [kg/h]	Steam [kg/h]	Steam [kg/h]	Steam [kg/h]	Steam [kg/h]	
Flow	1300	1300	642.2	2366	2366		657.8	100	310.6677698	576.8441869	887.5119568	887.5119568	112.4880432	
Temperature [C]	300	449.85	449.85	1000	100		400	950	345	345	345	345	345	
Pressure [kPa]	120	2500	110	120	120		120		120	120	120	120	120	
Concentration [vol%]														
O2	-	-	-	0.0435	0.0435	-	-	-	-	-	-	-	-	
N2	-	-	-	0.569	0.569	-	-	-	-	-	-	-	-	
CO	0.13	0.13	-	0.0002	0.0002	-	0.2569	-	-	-	-	-	-	
CO2	0.289	0.289	5.0E-05	0.1153	0.1153	-	0.5711	-	-	-	-	-	-	
CH4	0.064	0.064	-	-	-	-	0.1265	-	-	-	-	-	-	
H2	0.494	0.494	0.99995	-	-	-	-	-	-	-	-	-	-	
H2O	-	-	-	0.272	0.272	-	-	-	-	-	-	-	-	
CxHy	0.023	0.023	-	-	-	-	0.0455	-	-	-	-	-	-	
Tar	0	0	-	-	-	-	-	-	-	-	-	-	-	