FACULTY
OF MECHANICAL
ENGINEERING
CTU IN PRAGUE

Department of designing and machine components

Revision of spindle assembly tolerances for 6-axis single-purpose grinder

Tolerování sestavy vřetene šestiosé jednoúčelové brusky

BACHELOR THESIS

2019

Maria KAMENSKAYA

Study programme: B2342 THEORETICAL FUNDAMENTALS OF MECHANICAL ENGINEERING
Field of study: 2301R000 The programme has no field of study
Thesis supervisor: Ing. Karel Petr

BACHELOR'S THESIS ASSIGNMENT

I. Personal and study details

Student's name: **Kamenskaya Maria** Personal ID number: **466404**

Faculty / Institute: **Faculty of Mechanical Engineering**

Department / Institute: **Department of Designing and Machine Components**

Study program: **Theoretical Fundamentals of Mechanical Engineering**

Branch of study: **No Special Fields od Study**

II. Bachelor's thesis details

Bachelor's thesis title in English:

Revision of Spindle Assembly Tolerances for 6-Axis Single-Purpose Grinder

Bachelor's thesis title in Czech:

Tolerování sestavy vřetene šestiosé jednoúčelové brusky

Guidelines:

The aim of the work is to revise tolerances of grinding spindle for 6-axis flute grinding machine operated by Fanuc robot. The student is going to proceed from the existing tolerances of the part and suggest new tolerances according to the valid standards (prescriptions). The work is focused mainly on length tolerances and geometric tolerances. In the conclusion of the work, the result is going to be compared with the initial part in terms of manufacturing price, precision, functioning. Graphical output is intended to be a revised production drawing of the spindle and spindle assembly drawing.

Bibliography / sources:

[1] ŠVEC, V.: Části a mechanismy strojů. Spoje a části spojovací. Praha: ČVUT, 2008.
[2] Joseph E. Shigley: Konstruování strojních součástí. 2010. ISBN 978-80-214-2629-0
[3] FREDERICK E. GIESECKE. Technical Drawing with Engineering Graphics. 2014. Pearson New International Edition. ISBN 13: 9781292026183.
[4] Katalogy výrobců.
[5] Studijní podklady pro ISO GPS - K. PETR

Name and workplace of bachelor's thesis supervisor:

Ing. Karel Petr, Ph.D., Department of Designing and Machine Components, FME

Name and workplace of second bachelor's thesis supervisor or consultant:

Date of bachelor's thesis assignment: **08.04.2019** Deadline for bachelor thesis submission: **10.06.2019**

Assignment valid until: **12.12.2019**

Ing. Karel Petr, Ph.D.	Ing. František Lopot, Ph.D.	prof. Ing. Michael Valášek, DrSc.
Supervisor's signature	Head of department's signature	Dean's signature

III. Assignment receipt

The student acknowledges that the bachelor's thesis is an individual work. The student must produce her thesis without the assistance of others, with the exception of provided consultations. Within the bachelor's thesis, the author must state the names of consultants and include a list of references.

30.4.2019
Date of assignment receipt

Student's signature

DECLARATION OF AUTHORSHIP

I, Maria Kamenskaya, declare that this bachelor thesis titled „Revision of spindle assembly tolerances for 6-axis single-purpose grinder“ is my own. All the presented work is done by myself under the supervision of Ing. Karel Petr and with the use of sources listed in the References section.

In Prague **Maria Kamenskaya**

ACKNOWLEDGEMENTS

I would like to express my deepest gratitude to Ing. Karel Petr, my supervisor, for his valuable help and advice, suggestions and comments given during my work on this thesis, that was sometimes not easy at all. I also sincerely thank my bosses, Jan Sørensen and Ing. Martin Tiefenbach, for helpful, informative and patient explaining the details regarding the topic and general encouragement to study and work in the field of production machines. I am also extremely grateful to my family and friends for their care and motivation, especially to E. Chmel, who supported me through the whole period of creating this text.

ABSTRACT

- **Author's name:** Maria KAMENSKAYA

- **Title of the work (Czech):** Tolerování sestavy vřetene šestiosé jednoúčelové brusky

  Title of the work (English): Revision of spindle assembly tolerances for 6-axis single-purpose grinder
- **Year:** 2019
- **Department, thesis supervisor:** Department of designing and machine components, Ing. Karel Petr
- **Bibliographic evidence:**
  - Number of pages: 38
  - Number of figures: 42
  - Number of tables: 0
  - Number of appendices: 8

- **Keywords (Czech):** CNC broušení, vysoké otáčky, sestava vřetene, geometrické tolerance, uložení, délkové tolerance, tolerance závitu, rozměrový obvod, ložisko, příruba, HSK
- **Keywords (English):** CNC grinding, high speeds, spindle assembly, geometrical tolerances, fit, dimensional tolerances, thread tolerances, dimensional chain, bearing, flange, HSK

- **Abstract (Czech):** Náležitě navržená sestava vřetene je důležitou podmínkou pro správný průběh procesu broušení. Cílem této bakalářské práce je revize již existující sestavy vřetene jednoúčelové šestiosé CNC brusky, stanovení problémů, hlavně spojených s tolerancemi součástí sestavy a naznačení řešení každého z nich. Výsledkem práce jsou revize výkresů změněných součásí a celé sestavy.
- **Abstract (English):** Correctly designed spingle assembly is critical for the proper operation of the grinding machine. The aim of this bachelor thesis is to revise the grinding spindle assembly of an existing 6-axis single-purpose CNC grinder, figure out the problems, mainly connected with the tolerances of the assembly parts and suggest an appropriate solution for each of them. The result of the work is presented in a form of revised drawings of changed parts and the whole assembly.

Contents

ABBREVIATIONS

Description	Contraction
Revolutions per minute	RPM
Polyalphaolefin	PAO
Molybdenum disulfide	MoS_2
Polytetrafluoroethylene	PTFE
Titanium carbide	TiC
German: „Hohl Shaft Kegel“ – „hollow-shank taper“	HSK
Swedish: „Svenska Kullagerfabriken“ – „Swedish Ball Bearing Factory“	SKF
International Organization for Standardization	ISO
German: „Deutsches Institut für Normung“ – „The German Institute for Standardization“	DIN
Maximum Material Condition	MMC

SYMBOLS

Parameter	Symbol	SI Units
Tolerance	T	m
Clearance	Δ	m
Dimensional chain element	A_i	m
Angular misalignment	α	°

1. Introduction

A correctly designed spindle assembly is extremely important for proper and effective grinding process. A serious concern should be made when arranging the tolerances of the assembly parts, since the result is supposed to be provided with high level of precision. Otherwise, the process will result in such undesired effects as: vibrations, premature wear and destruction of parts, noise, etc. This bachelor thesis is going to cover the main aspects that should be taken into account during the design of the spindle assembly, especially its tolerances, as well as developing a solution for an already existing machine, which has certain flaws in spindle assembly tolerances.

The machine that I am going to examine is a single-purpose flute grinder with 6 axes (Figure 1). It operates at the velocity span of 3.000-15.000 RPM, with 15kW direct drive.

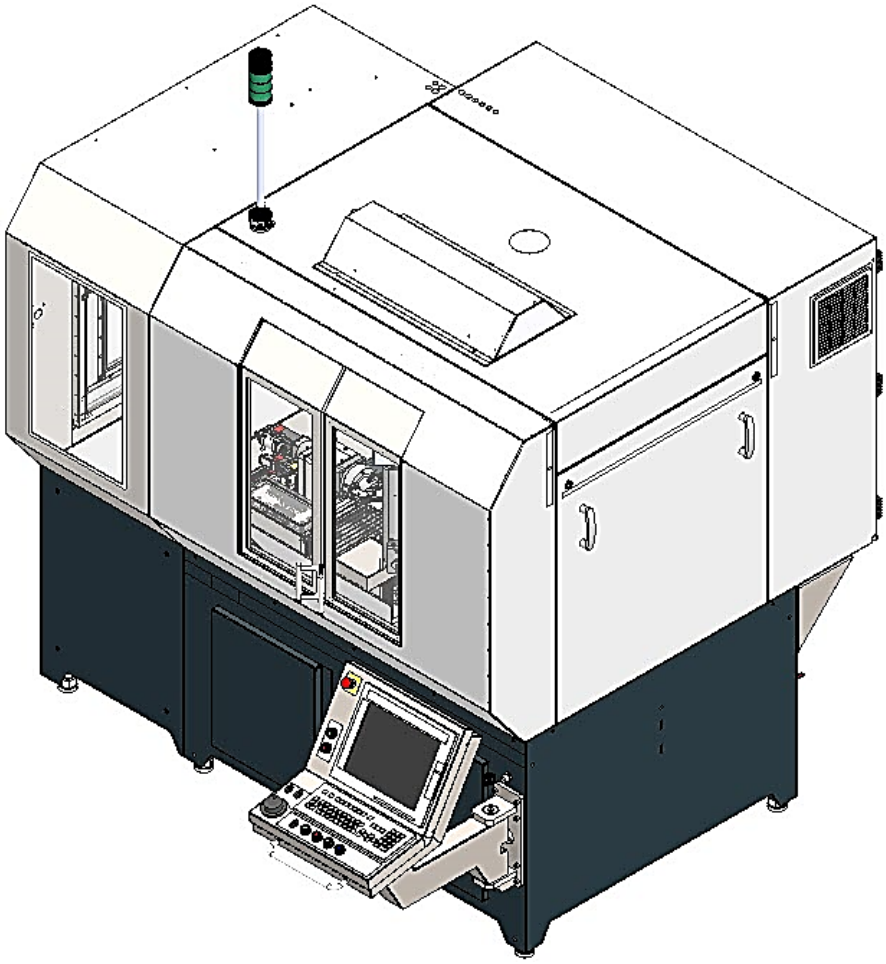

Figure 1. FG-15

The spindle arbor of the machine carries all the torque from the motor, transmitting it to a grinding wheel, which removes material from the product surface. The result is supposed to be very accurate, that is why it is critical for the rotating parts to have as little declines as it is possible. This requires a high-precision manufacturing of the spindle arbor, that is, in fact, a costly and a quite long-lasting process.

The spindle arbor of FG-15 wears faster, than it is supposed to wear. That means, something is not right with the assembly. Moreover, such problems as rattling bearings, occasional noise were detected. So, the assembly needs to get a revision, and that is why I am going to study the problem.

In my work, I am aiming to revise the assembly, detect all the problems and come up with a new, improved version of the assembly. The suggested improved assembly is assumed to work better with respects to vibrations, temperature and wear.

2. Theoretical part

The existing spindle assembly itself has several “problematic units”, where problems of different type may occur: bearings on both sides of the spindle, HSK taper, couplings and other parts connections. Obviously, they mostly refer to parts connections of different types and can be influenced (optimized) by changing tolerances of the corresponding dimensions. These units are specified in Figure 2:

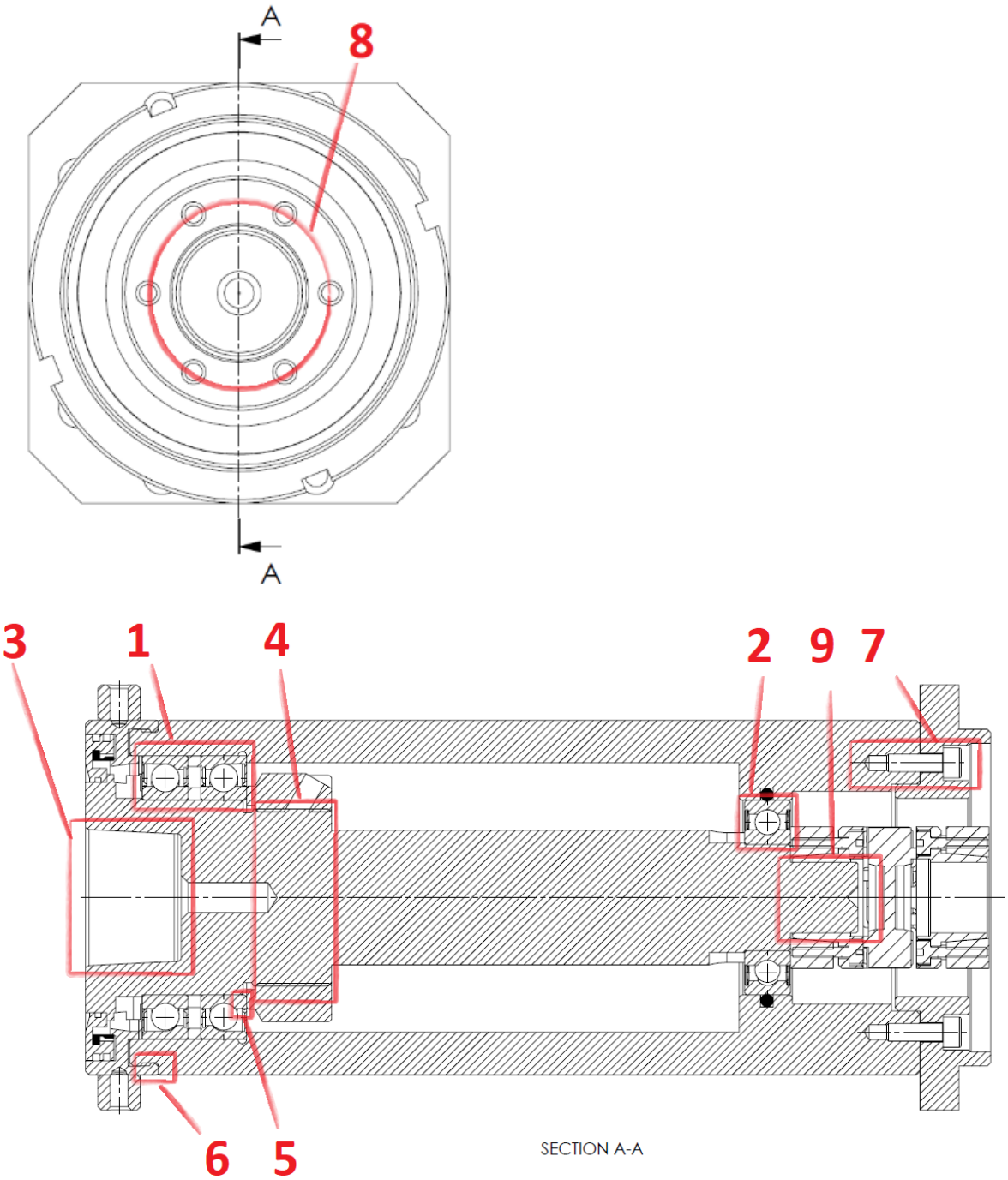

Figure 2. Problematic units of the examined assembly. 1 – Angular contact bearings; 2 – Deep groove ball bearing; 3 – HSK taper surface; 4 – Lock nut; 5, 6 – Linear dimensional chains; 7, 8 – Flange connections; 9 – Coupling connection

In following paragraphs I am going to cover main aspects of knowledge needed for understanding these problems.

2.1. Bearings

The issue of bearings is probably the most extensive question of all previously specified ones. In addition, it is critical to get familiar with it when designing a spindle, because bearings directly affect the performance of the spindle. First, general consideration must be taken basing on operating conditions (function and construction of components to house bearings, mounting location, magnitude and direction of bearing load, shaft speed, lubrication method). Then, bearing dimensions and tolerances must be considered. They are based on load conditions, safety factor, shaft runout tolerances. The output of tolerance consideration is a certain bearing precision grade, which is specified in international standards. [1]

2.1.1. Bearing accuracy:

Radial and axial runout of a main spindle bearing greately affect the running accuracy of the main spindle and therefore have to be strictly controlled. If bearings are to be mounted directly onto the shaft, the cylindricity tolerance and total runout tolerance of the bearing seat should, depending on the requirements, be one to two IT tolerance grades better than the prescribed dimensional tolerance. Abutments for bearing rings should have a perpendicularity tolerance and total axial runout tolerance that is at least one IT tolerance grade better than the diameter tolerance of the associated cylindrical seat. [1]

2.1.2. Design and accuracies of shaft and housing

To attain a higher accuracy with a main spindle, the following tolerances should be carefully considered: circularity, cylindricity, coaxiality of a machine components other than a bearing: shaft, housing. These are significant factors as well as machining method and finish accuracy of shaft and housing. [1] Manufacturers always specify the recommended fits and surface roughnesses in its catalogues and guidelines, and it is important to follow them.

The bearing-related corner radius and its possible interference with the bearing itself is another problem that may appear. To avoid this, chamfering dimensions and corner roundnesses should be controlled – and be made according to manufacturer specifications. [1]

2.1.3. Bearings rigidity

The rigidity of a bearing built into a spindle directly affects the rigidity of the spindle. In particular, a high degree of rigidity of spindle is required to insure adequate productivity and accurate finish of workpieces.

Bearing rigidity is governed by factors:

1. **Type of rolling elements**: roller or ball, where rigidity is determined by the type of contact, which the rolling elements have with the rings. Roller elements have a linear contact, while ball ones have a point contact. The dynamic deformation of a bearing relative to a given load is smaller with a roller bearing. However, having sliding portions, a rolling bearing is disadvantageous in supporting a high-speed shaft. [1]
2. **Size and quantity of rolling elements**: This factor is based on the targeted performance. Larger rolling elements means larger rigidity. However, such bearings tend to be affected by gyratory sliding centrifugal force. As a result, its high-speed performance will be deteriorated. Moreover, it means also an increased number of heat generation sources, possibly leading to greater temperature rise. That means, much smaller rolling elements are used for high-speed applications. [1]
3. **Material of rolling elements:** Ceramic balls, when used in angular contact ball bearings, offer different advantages over typical bearing steel balls. First, ceramics has greater Young's modulus than steel (315 GPa vs 210 GPa) and at the same time it has 60% less mass. This is significant, becasue as a ball bearing is operating, particularly at high rotating speeds, centrifugal forces push the balls to the outer race and even begin to deform the shape of the ball. This leads to radid wear and bearing deterioration. In fact, the use of ceramic balls allows up to 30% higher speed for a given ball bearing size without sacrificing bearing life. The other advantage is that ceramic balls do not react with the steel raceways. One of the most prominent mechanisms of bearing failures is surface wear created by microscopic "cold welding" of the ball material to the raceway. Surface tend to become rough, that results in heat generation and failure. Moreover, ceramic ball bearings operate at lower temperatures. The result is longer life for the bearing lubricant. As well as that, they operate at much lower vibration levels. Tests have shown that spindle utilizing hybrid ceramic balls exhibit higher rigidity and have higher natural frequencies making them less sensitive to vibrations. [2]
4. **Bearing contact angle**: Smaller contact angle on an angular contact ball bearing results in greater radial rigidity. When used as a thrust bearing, this type of bearing should have a greater contact angle to enable greater axial rigidity.
5. **Preload on bearing:** When the inner rings are tightened to bring them together, bearings are each axially displaced, attaining a certain preload. If an axial load is exerted from outside, the occuring displacement is smaller when compared with non-preloaded bearings. That means, preloaded bearing has higher rigidity. But too great preload results in overheating, seizure and premature wear. [1] Preloading magnitude can be light, medium and heavy. Light preload is used to allow maximum speed, but less stiffness; it is applied when culling loads are light and top RPM is needed. Heavy preloads allow less speed and higher stiffness. A spindle that is desired to have the highet speed will not have the maximum stiffness possible, and,

the spindle with the highest stiffness cannot run at high speed without sacrificing bearing life. [2]

2.1.4. Bearing lubrication methods

The function of lubrication is to provide a microscopic film between the rolling elements to prevent abrasion. In addition, lubrication protects the surfaces from corrosion and protects the area from particle contamination. [2] The lubricant should meet such requirements as: chemical stability, ability to provide protective separating film, ability to allow the dissipation of friction heat (to prevent overheating and deterioration of the lubricant). It should also maintain a stable viscosity over a broad range of temperatures.

The lubricant (and amount) selected impacts the maximum operating speed and torque (both starting and running). In miniature bearings the lubricant can impact the noise level. Typical lubricants are grease and oil, sometimes solid films are also used.

Grease: Grease is injected into the space between balls and races. It requires minimum maintetance. Most grease kinds are rated to operate at temperatures under 150°C. [2] Grease consists of a base oil with a thickener added. These thickeners consist primarily of metal soaps (lithium, sodium, aluminum, and calcium), organic, or inorganic compounds. While these thickeners greatly influence the characteristics of the grease, the lubricating properties of the grease are attributable to its base oil. For example, ester oil base, barium complex thickener is the grease type which allow to tolerate high speeds. [2] In addition, grease can contain additives that improve its performance. Additive types include antioxidant, anticorrosion, anti-wear, fillers, fortifiers, and extreme pressure fortifiers. Temperature range, base oil viscosity, and stiffness or penetration level are key characteristics to consider when selecting a grease. [3]

Oil: Oil is more sufficient at high speeds than grease. However, oils are subject to evaporative losses so there service life in a bearing is less than when grease is used. Oil mist, where oil mixed with compressed air is supplied to the bearing, is simple and it is also able to clean and cool the tools. Oil jet, where high pressupe pump deliver oil directly into the bearing race, is suitable for spindles that must tolerate high loads, speeds and temperatures. System of pulsed oil-air injects oil in very small quantities with compressed air, into the bearing cavity. [2] Both petroleum based and synthetic oils are available. Examples of synthetic oils are silicone, diesters, PAO's, and fluorinated compounds. Bearings lubricated with oil will exhibit less start up and running torque and have higher speed capability. Miniature and instrument bearings are often only lubricated once for the life of the bearing, making the choice of lubricant critical. Larger bearings are subject to re-lubrication as part of the machinery maintenance cycle. These bearings are often lubricated via oil recirculation systems that are designed into the machinery or equipment. Temperature range, viscosity, evaporative rate are key characteristics to consider when selecting an oil. [3]

Solid Films: These are non-fluid coatings applied to the frictions surfaces to prevent wear. They are used in extreme situations where an oil or grease cannot survive and are typically selected as a last resort or option. These include harsh environments such as extreme temperatures, vacuum, or radiation. These coatings include graphite, MoS2, silver, gold, or PTFE. Hard coatings include TiC or chrome. Solid films are engineered on a specific application by application basis. [3]

2.1.5. Deep groove ball bearings

Deep groove ball bearings are the most common type of ball bearing. They have deep raceway grooves and their race dimensions are close to the dimensions of the balls that run inside.

There are two categories of deep groove ball bearings: single and double-row bearings. In the second one, bearing balls are arranged in two rows. Many varieties of deep groove ball bearings are introduced to meet customer's needs. They are made in various sizes and materials and designed for different loads and conditions. There are deep groove ball bearings for light loads and small assemblies as well as ones which can withstand heavy loads. Some of them are able to work at high temperatures, up to 350°C, and can be used, for instance, in industrial ovens. [4]

2.1.6. Angular contact ball bearings

Angular contact ball bearngs are commonly used today in very high speed spindle designs. This is due to the fact that angular contact ball bearings provide the precision, load carrying capacity and speed. They utilize a number of precision balls fitted into a precision steel race. Such bearings are designed to provide both axial and radial load carrying capacity, when properly pre-loaded.

The contact angle determines the ratio of axial to radial loading possible. Typically, contact angles are 12°, 15°, 25°. The lower the contact angle is, the greater is the radial load carrying capacity. The higher the contact angle is, the higher is the axial loading capacity. [2]

2.2. HSK taper

HSK is the German abbreviation for „hollow taper shank". It was developed in the University of Aachen, Germany in 1991 as an alternative to other toolholders, and it was supposed to be more capable of handling high-speeds. In 1993 HSK became a DIN standard. The contemporary version of the standard is ISO 12164-1:2001 [5] for shanks and ISO 12164-2:2001 for receivers [6]. The main development of the initial version of the standard was changing formerly 1:10 shank taper ratio to 1:9.98. The receiver taper ratio remained

1:10. It was to make sure the taper basic diameter will contact the spindle when HSK toolholder has dual contact on taper and face [7] (Figure 3).

There are many reasons to use HSK, particularly on high speeds: high static and

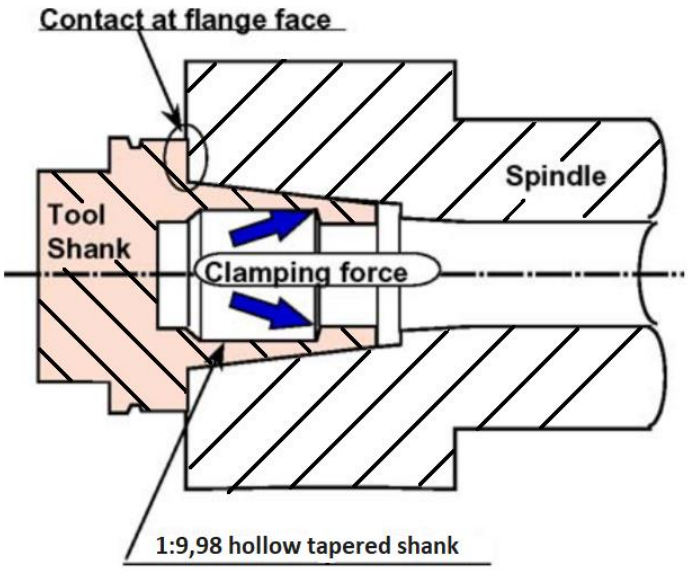

Figure 3. Basic structure of HSK tool interface. [9] (edited by author)

dynamic stiffness, less slippage due to face contact, as well as high accuracy and low weight.

Weck, Schubert [8] described influencing factors on the height of the boundary rotational speed for the hollow shank. According to their article, the factors are: larger radial oversize, larger length of the spindle taper, smaller outer spindle diameter and smaller number (absence) of driving slots. They consider the factor of radial overmeasure to have the biggest influence on the boundary rotational speed. The spindle, due to its larger diameter, expands faster than the tool shank at increasing speeds (increasing speeds mean increasing centrifugal force). Here comes another advantage of HSK – since the toolholder is hollow, its taper shank will heat more evenly and grow with the spindle taper. Nevertheless, the contact at the tapered face become looser and the influence of this deformation is not negligible at high speeds. [9] The expansion differences can be compensated for a longer period by a large radial overmeasure, making higher boundary speeds possible.

A series of experiments was presented in “Contact analysis of HSK toolholder-spindle in high-speed machining”. [10] It is stated in the work, that contact area “is of great importance for the characteristics of the toolholder-spindle interface. In order to locate accurately using tapered face, it requires that the proportion of the close contact area must achieve 70% and the big end of the tapered face must contact. As for the flange contact, it needs to guarantee that the flange face of the toolholder and the spindle should contact at any moment, and the contact area ratio also can't be less than 70%”. The experiments show that gaps between spindle and shank, which appear at high speeds, have strongly negative impact on stress distribution. Authors concluded that the tapered contact area should be

ensured above a certain value and the contact stress should also be controlled not to exceed the permissive value.

Contact area and contact stress are affected by clamping force, spindle speed and interference magnitude; and it is important to note that relying solely on the interference fit cannot guarantee that the connection between toolholder and spindle is strong enough.

That is why HSK is widely used together with different clamping systems. Although some authors point out that it might be reasonable to standardize a clamping unit as well of clamping systems.

The example of the HSK clamping system is in the Figure 4.

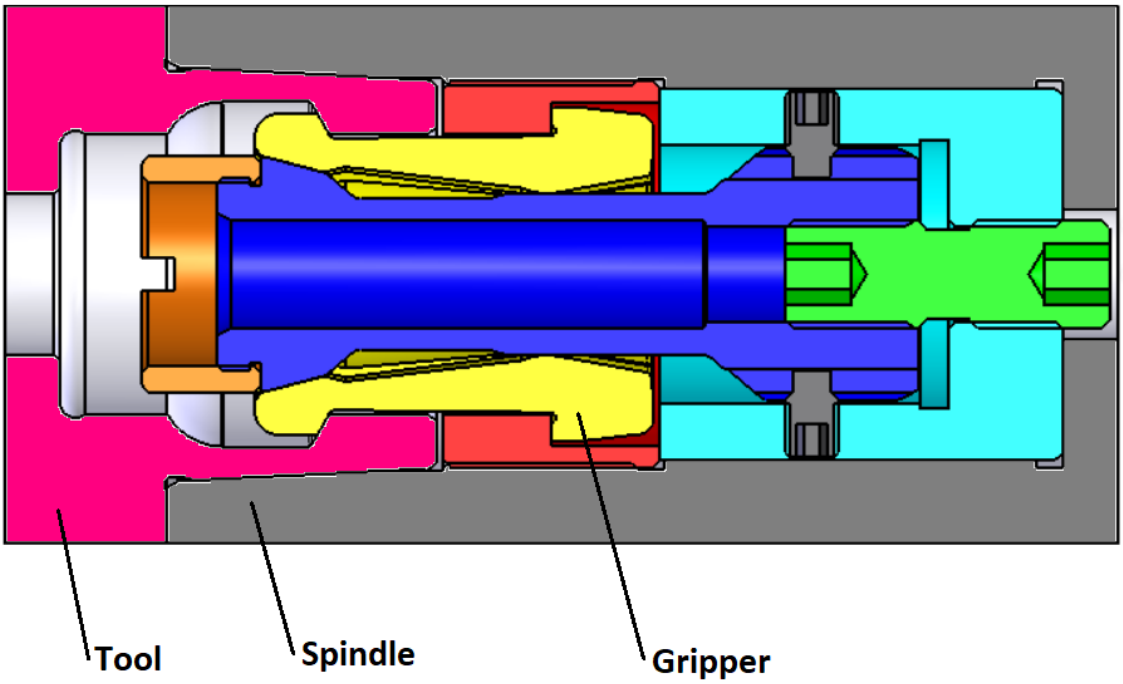

Figure 4. HSK clamping system example [22] (edited by author)

It is quite obvious HSK technology requires substantial capital investment: taper surface precision is prescripted to be very high and Vasilash [11] claims that running a counterfeit taper, which appear to be HSK, but was not manufactured to the existing tolerances at high speeds, such as 40000 rpm, is „potentially catastrophic“.

2.3. Couplings

Every manufacturing process requires the transmission of power from one part of a machine to another, and in most cases this power is transmitted by a motor (or some force which is converted to rotation of a shaft) that must then be connected to another shaft. Typically, some form of coupling is used to join the shafts together. If the shafts are not properly aligned, then forces will be generated in the coupling as the shaft attempt to find a common axis of rotation. This means that energy will be lost in the coupling, and

increased loads will be placed on mechanical components. So, it is important that the shafts are properly aligned with each other to achieve the most efficient energy transfer. [12]

SKF asserts, that shaft misalignment is responsible for up to 50% of all costs related to rotating machinery breakdowns. The manifestations of misalignment are: increased vibrations, increased energy consumptions, increased loads on bearings, seals, and other mechanical components. Improper alignment causes additional forces on seals that can result in leakage of fluids, and problems with lubrication. Problems that are perceived as “lubrication faults” are often symptoms of misalignment. Effect on seal life can vary, but a reduction of 50% to 70% is not unusual. Static shaft offsets from pipe strain and soft foot are often causes of seal failure. Another consequence of misalignment is temperature increase. Using a flexible coupling as a means of avoiding need for precision alignment is probably a bad idea in some cases: the forces and friction caused by misalignment will have an effect on coupling life. Therefore, taking into consideration all these factors, this problem is arguably responsible for reduced production capacity and impaired product quality, and all of these problems are correctable with a proper approach to precision alignment. [12]

2.4. Mating flanges

When parts are mated with screws threaded into a tapped hole, it is possible for interference to result due to lack of perpendicularity of holes, even though the holes are located within their positional tolerances. [13]

For example, holes of two mating parts on Figure 5 have only geometrical tolerance of position (ISO 1101:2017 -Geometrical product specifications (GPS) — Geometrical tolerancing — Tolerances of form, orientation, location and run-out [14]). The case presented in the Figure 6 shows, that it is not enough and interference might occur.

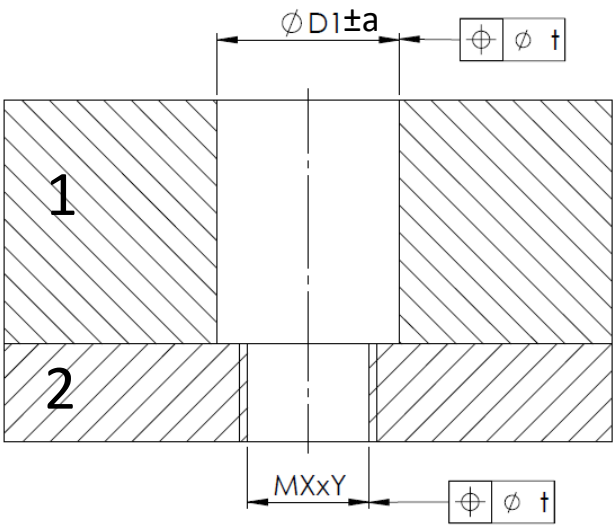

Figure 5. Incomplete hole position tolerances

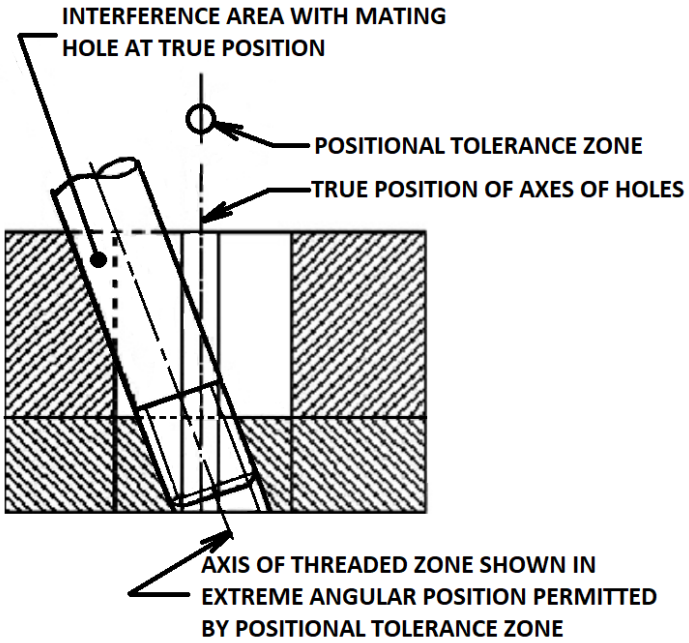

Figure 6. Interference which might occur even when the hole is made within true position tolerances [13]

The correct approach to mating flanges is not only to use the position tolerance for holes, but to use it together with the maximum material principle for pass-through holes and projected tolerance zone for threaded holes.

2.4.1. Maximum Material Condition (MMC)

The state of the considered feature for which at all points the feature is everywhere at the limit of size where the maximum required material is stated, e.g. minimum hole diameter and maximum shaft diameter. The value of a geometrical tolerance may be increased by the difference between the actual dimension of the feature and the limit of maximum material. Tolerance of position is calculated for the most unfavourable case, i.e. for the smallest possible hole, and the greatest possible diameter of screw (pin). When the actual diameter of the hole is by Δ value greater than the smallest possible hole, the diameter of the tolerance cylinder increases to T+Δ. [15]

That means, if we apply MMC on the part 1 diameter D1 from the Figure 5, which has a tolerance of ± a, the geometrical tolerance (GT) will be changing in the following way:

$$D1_{min} = D1 - a, GT_{D1min} = t \qquad (1)$$

$$D1_{\Delta} = D1 - a + \Delta, GT_{D1\Delta} = t + \Delta \qquad (2)$$

where GT_{D1min} is a value of geometrical tolerance for smallest possible hole and $GT_{D1\Delta}$ is a tolerance for a hole larger than smallest possible one. So, the tolerance increases by a so-called “bonus tolerance”.

2.4.2. Projected tolerance zone

In some cases, the tolerance of orientation and position shall apply not to the feature itself but to the external projection of it (Figure 7). [15]

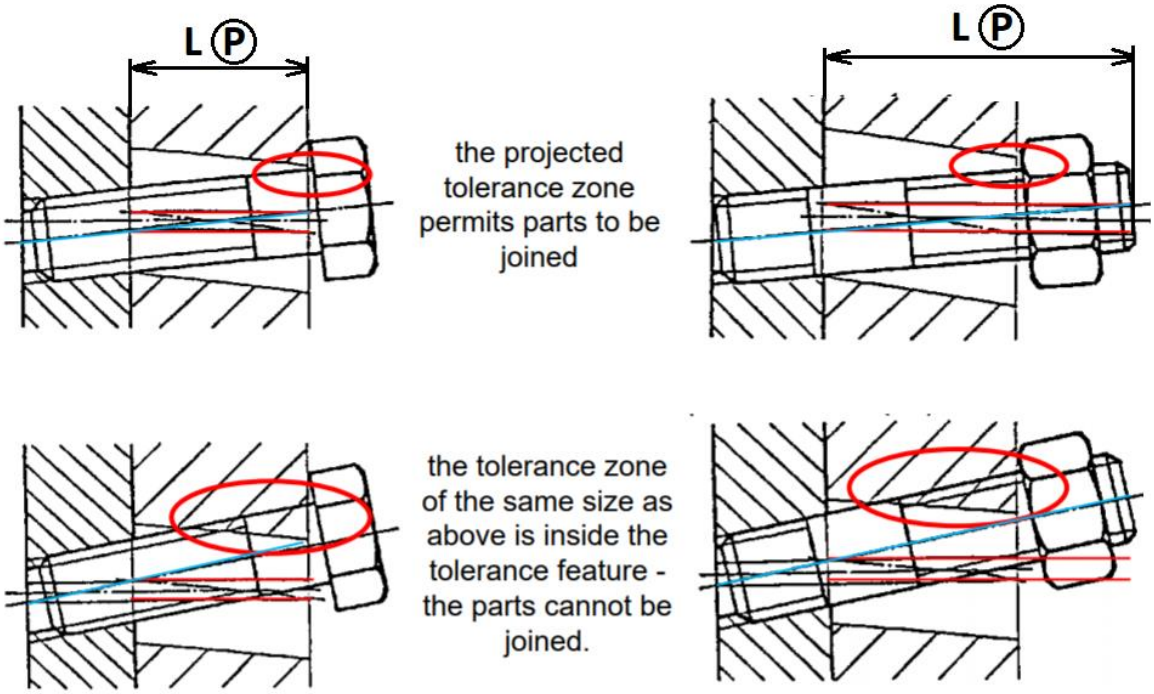

Figure 7. Example and analysis of fastening two centering flanges using the projected tolerance zone [15]

Applying these two conditions to parts, which are to be mated, can guarantee that they will never interfere with a screw, and therefore will be assembled together properly.

2.5. Linear Dimensional Chains

A linear dimensional chain is a set of independent parallel dimensions which continue each other to create a geometrically closed circuit. They can be dimensions specifying the mutual position of components on one part or dimensions of several parts in an assembly unit.

A dimensional chain consists of separate partial components (input dimensions) and ends with a closed component (resulting dimension). Partial components are dimensions either directly dimensioned in the drawing or following from previous manufacturing, possibly assembly operations. The closed component in the given chain represents the resulting manufacturing or assembly dimension, which is the result of combining partial dimensions as a scaled manufacturing dimension, possibly assembly clearance or interference of a component. The size, tolerance and limit deviations of the resulting dimension depend directly on the size and tolerance of partial dimensions. Depending on how the change of partial component affects the change of the closed component, two types of components are distinguished in dimensional chains:

- increasing components, which are partial components, the increase of which results in an increase of the closed component and decreasing components, which are partial components, the increase of which results in a decrease of the closed component.

For example, in Figure 8 there is a dimensional chain, where A, B, C, D are input dimensions and clearance Z is resulting dimension. A is an increasing dimension and B, C, D are decreasing dimensions.

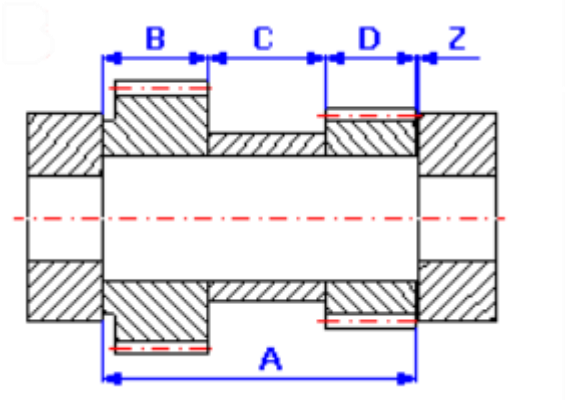

Figure 8. Linear dimensional chain example [25] (edited by author)

The following equations apply:

$$Zmax = Amax + Bmin + Cmin + Dmin \quad (3)$$

$$Zmin = Amin + Bmax + Cmax + Dmax \quad (4)$$

Minimal clearance is often calculated for **worst case or maximum – minimum method** - method of complete interchangeability – combine extreme conditions of assembly or operation.

There is also some point in **statistical method - method of incomplete interchangeability** - expects that extreme conditions of dimensions or tolerances for assembly or operation are not likely. The greater tolerances are permitted, what results in lower production costs. [16] Moreover, manufacturers (technologists) will not have such a problem, as they would have had.

3. Analytical (practical) part

According to the aspects examined in the theoretical part of the work, I figured out a piece of work that needs to be applied to the spindle assembly:

- check if the bearings were chosen correctly. Then, according to corresponding bearings catalogue tables, check if the prescribed shaft and housing tolerances match ones stated on parts drawings
- compare tolerances stated in the ISO 12164-2:2001 [6] standard to existing tolerances of HSK taper of the spindle arbor
- study and calculate the problematic linear dimensional chains
- check for thread presicion prescriptions for SKF lock nut
- check if the holes true position tolerances are stated properly
- study the coupling connection and check for possible misalignment

In the case that during revising the stated aspects I find a problem of any type, I will suggest a way to correct the mistakes made during design.

3.1. Bearings

Initially, two types of bearings have been used in the assembly: two super-precision angular contact bearings on the side of the instrument (left side of the drawing) and more commonly used deep groove ball bearing on the side of the coupling (right side of the drawing). My task was to correct mistakes made during bearings choice (if any), then change appropriate tolerances of the shaft and housing in accordance to SKF guidelines.

3.1.1. Super-precision angular contact ball bearings

The exact definition of the used bearings can be read from the SKF model number (Figure 9):

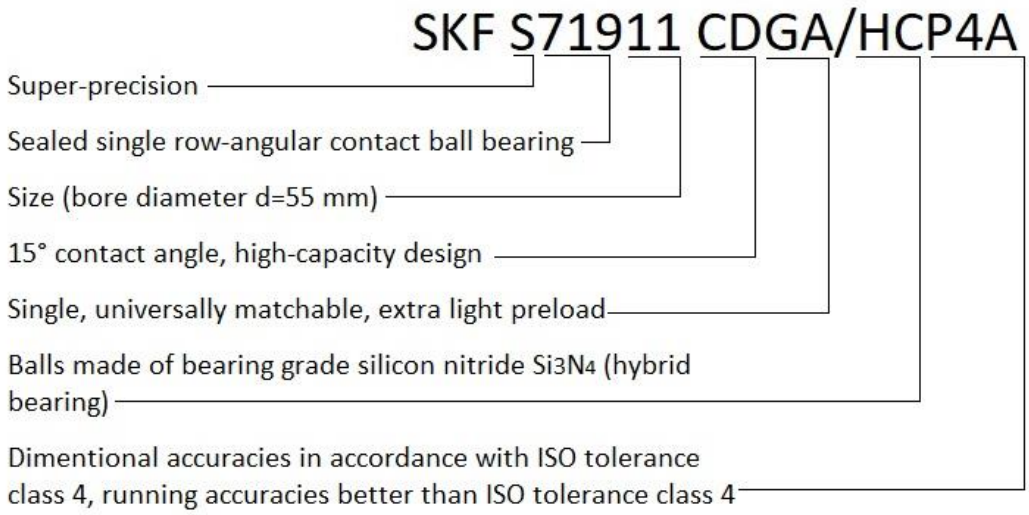

Figure 9. Angular contact bearings definiton. [17]

These bearings were chosen using the SKF bearing calculator. That meant, despite they are suitable, no further research was made to examine this choice and there could be probably a more optimal solutuion.

That is quite obvious, that a 15° contact angle should be used, since the radial forces are prevailing. Preferring silicon nitride balls, according to the theoretical part, was the right choice as well. More difficult questions were: if the bearings have the right tolerance grade and if single, universally matchable bearings should be used instead of matched bearing sets. I contacted SKF experts to solve these questions. According to Carsten Harreby, the tolerance grade was correct for this application. As for bearing sets, they, compared to universal paired bearings give "very little difference and the availability is much better for universal bearings." This means, the angular contact ball bearings should not be replaced, since they satisfy all the application requirements.

Therefore, I could start tolerances revision with changing the tolerances of the shaft and housing. This referred to bearings seats tolerances and tolerances of the fits.

The following tables are provided in the SKF Super-precision bearings catalogue – in Figure 10 there are geometrical tolerances, Figure 11 shows values of ISO tolerance grades from the previous table, Figure 12 specifies surface roughness prescriptions [17]:

Table 13

Geometrical tolerances for bearing seats on shafts and in housings

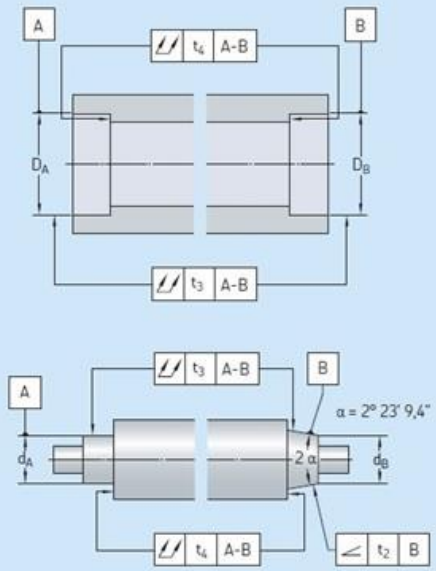

Surface Characteristic	Symbol	Tolerance zone	Permissible deviations Bearings to tolerance class P4, P4A, P4C, SP	P2, PA9A, UP
Cylindrical seat Total radial run-out	⌰	t_3	IT2/2	IT1/2
Flat abutment Total axial run-out	⌰	t_4	IT1	IT0
Angularity	∠	t_2	IT3/2	IT2/2

Figure 10. Geometrical tolerances for bearing sests on shafts and housings. [17]

Table 14

Values of ISO tolerance grades

Nominal dimension over	incl.	Tolerance grades IT0 max.	IT1	IT2	IT3	IT4	IT5
mm		µm					
–	3	0,5	0,8	1,2	2	3	4
3	6	0,6	1	1,5	2,5	4	5
6	10	0,6	1	1,5	2,5	4	6
10	18	0,8	1,2	2	3	5	8
18	30	1	1,5	2,5	4	6	9
30	50	1	1,5	2,5	4	7	11
50	80	1,2	2	3	5	8	13

Figure 11. Value of ISO tolerance grades. [17]

Table 15

Surface roughness of bearing seats

Seat diameter over	incl.	Recommended R_a value for ground seats Shaft Bearings to tolerance class P4, P4A, P4C, SP max.	P2, PA9A, UP	Housing bore Bearings to tolerance class P4, P4A, P4C, SP max.	P2, PA9A, UP
mm		µm		µm	
–	80	0,2	0,1	0,4	0,4

Figure 12. Surface roughness of bearing seats. [17]

The tolerances stated by SKF were different from tolerances used in the production drawings of both shaft and housing. First, total runout tolerance should be used instead of the circular runout. Then, the tolerances should be referenced to a common datum A-B instead of just datum A. As well as this, the values of the runout tolerance should be changed to be more precise. The other thing to be changed was the surface roughness on the shaft seat surface, where 0.4 µm value should be replaced by 0.2 µm.

Fit tolerances had to be changed in accordance with the SKF prescriptions, too: Figure 13 and Figure 14 specify the following requirements:

Table 7

Diameter tolerances for bearing seats on steel shafts

Bearing type	Shaft diameter over	Shaft diameter incl.	Tolerance class[1] Bearings to tolerance class P4, P4A, P4C, SP	Tolerance class[1] Bearings to tolerance class P2, PA9A, UP	Deviations high	Deviations low
–	mm		–		µm	
Angular contact ball bearings with rotating outer ring load	–	400	h4	h3	–	–
with rotating inner ring load		30			+1	–2
	30	80	–	–	+2	–3
	80	120	–	–	+3	–3
	120	180	–	–	+4	–4
	180	250	–	–	+5	–5
	250	315	–	–	+6	–6
	315	400	–	–	+6,5	–6,5
Cylindrical roller bearings with a cylindrical bore	–	40	js4	–	–	–
	40	280	k4	–	–	–
	280	500	k4[2]	–	–	–
	500	–	Contact the SKF application engineering service.			
Double direction angular contact thrust ball bearings	–	200	h4	h3	–	–

For hollow shafts, when A > 1 000 000 mm/min, contact the SKF application engineering service.
[1] All ISO tolerance classes are valid with the envelope requirement (such as h4Ⓔ) in accordance with ISO 14405-1.
[2] General guideline only. SKF recommends contacting the SKF application engineering service.

Figure 13. Shaft diameter tolerances. [17]

On the shaft, the existing diameter tolerances should be changed from $55^{0}_{-0.003}$ to $55^{+0.002}_{-0.003}$.

Table 8

Diameter tolerances for bearing seats in cast iron and steel housings

Bearing type	Conditions	Housing bore over	Housing bore incl.	Tolerance class[1] Bearings to tolerance class P4, P4A, P4C, SP	Tolerance class[1] Bearings to tolerance class P2, PA9A, UP	Deviations high	Deviations low
–	–	mm		–		µm	
Angular contact ball bearings	Locating bearings, axial displacement of outer ring unnecessary	–	18	–	–	+4	–1
		18	30	–	–	+5	–1
		30	50	–	–	+6	–1
		50	80	–	–	+7	–1

Figure 14. Spindle pipe diameter tolerances. [17]

On the spindle pipe, the existing diameter tolerances should be changed from $80^{+0.011}_{+0.005}$ to $80^{+0.007}_{-0.001}$.

Finally, all above stated changes were applied to the spindle arbor (Figure 15).

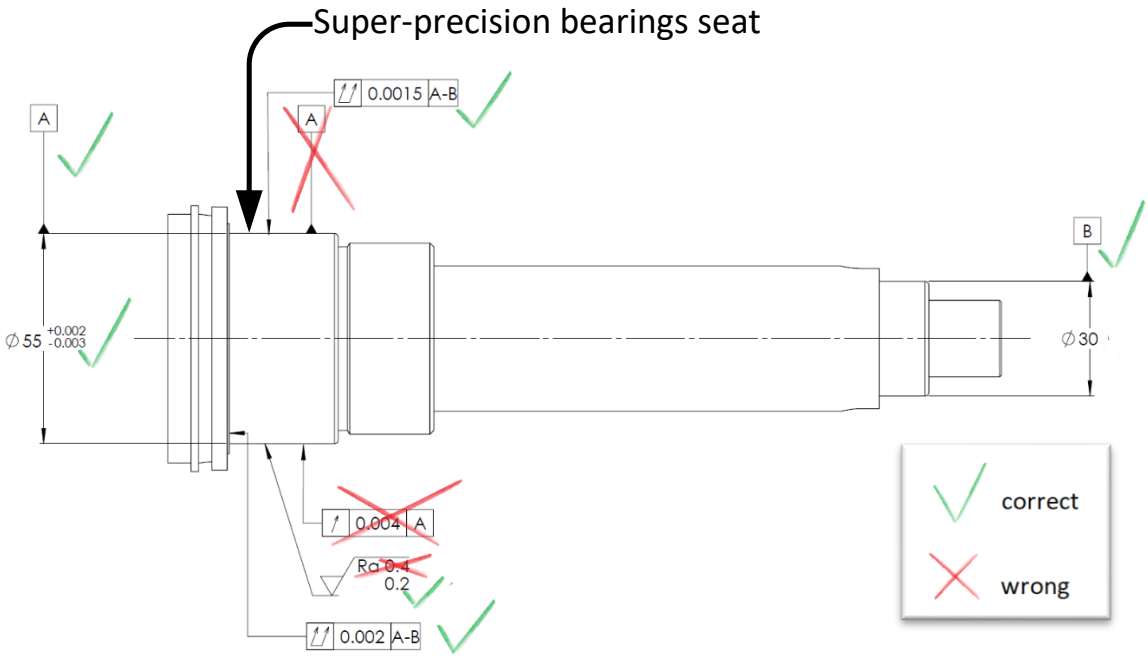

Figure 15. Tolerances and roughness correction- shaft.

Analogously, I did the revision of the spindle pipe (Figure 16):

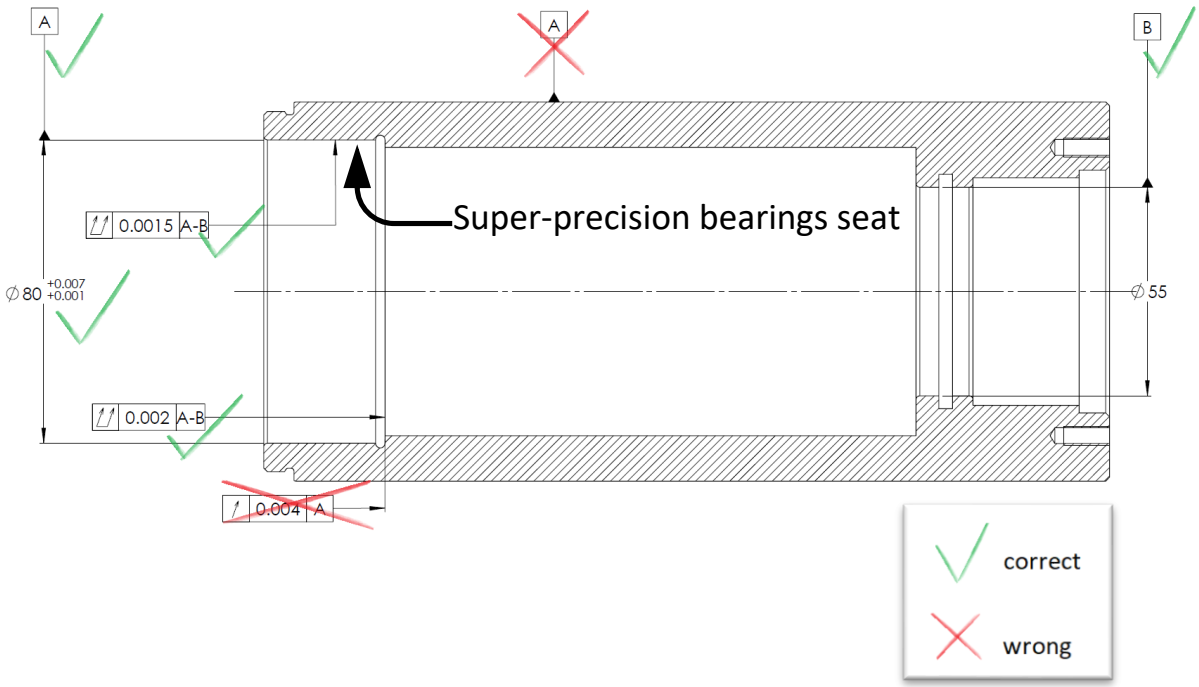

Figure 16. Tolerances correction - spindle pipe.

3.1.2. Deep groove ball bearing

As for the bearing on the right side, it had the following definition: „Single row deep groove ball bearing with shield on both sides“ (SKF 6006-2Z).

After taking a look at the bearing properties, I found out that its limiting speed was lower, than the operating speed of the machine: it was 14000 rpm (Figure 17), whereas the operating range of the grinder is 3000-15000 rpm.

1.1 Single row deep groove ball bearings
d 30 – 35 mm

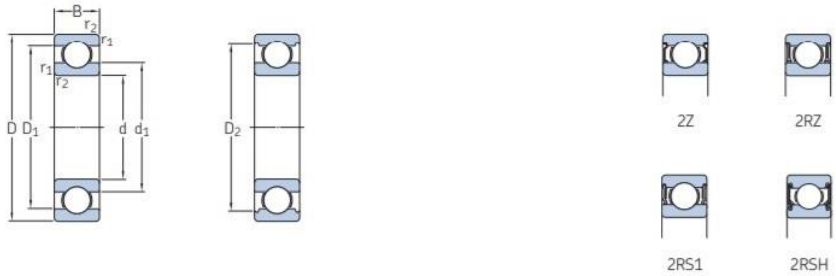

Principal dimensions d	D	B	Basic load ratings dynamic C	static C_0	Fatigue load limit P_u	Speed ratings Reference speed	Limiting speed[1]	Mass	Designations Bearing open or capped on both sides	capped on one side[1]
mm			kN		kN	r/min		kg	–	
30 cont.	55	9	11,9	7,35	0,31	28 000	17 000	0,089	▸ 16006	–
	55	13	13,8	8,3	0,355	28 000	17 000	0,12	▸ 6006	–
	55	13	13,8	8,3	0,355	–	8 000	0,12	▸ 6006-2RS1	6006-RS1
	55	13	13,8	8,3	0,355	28 000	14 000	0,12	▸ 6006-2RZ	6006-RZ
	55	13	13,8	8,3	0,355	28 000	14 000	0,12	▸ 6006-2Z	6006-Z

Figure 17. Limiting speed. [18]

The SKF expert confirmed that it is actually a problem and suggested to replace this bearing with the following model: 6006 2RZTN9/HC5C3WT (Figure 18) with the limiting speed of 16000 rpm.

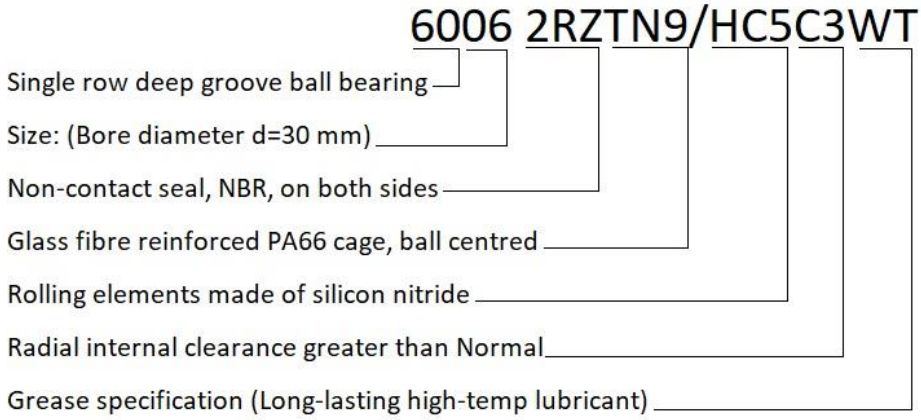

Figure 18. Second bearing definition. [19]

The tolerances for this bearing are divided depending on load conditions to „Light loads“ and „Normal to heavy loads“ categories. The load in centers, which is needed to

keep withstand the grinding force, was measured by adjusting the load controlled by servo motor working in pre-selected limits and it did not exceed 200 N. Since the tool is not pushed out of the center by the wheel, it can be claimed that the radial force of the wheel does not exceed a value of 200 N either.Therefore, the parameters should be chosen according to „Light loads“. (Figure 19).

Tolerances for solid steel shafts – seats for radial ball bearings[1)]

Conditions	Shaft diameter	Dimensional tolerance[2)]	Total radial run-out tolerance[3)]	Total axial run-out tolerance[3)]	Ra
	mm	–	–	–	µm
Rotating inner ring load or direction of load indeterminate					
Light loads (P ≤ 0,05 C)	≤ 17	js5	IT4/2	IT4	0,4
	> 17 to 100	j6	IT5/2	IT5	0,8
	> 100 to 140	k6	IT5/2	IT5	1,6

Figure 19. Shaft seats tolerances for the second bearing. [18]

Changes applied to the spindle arbor are on Figure 20.

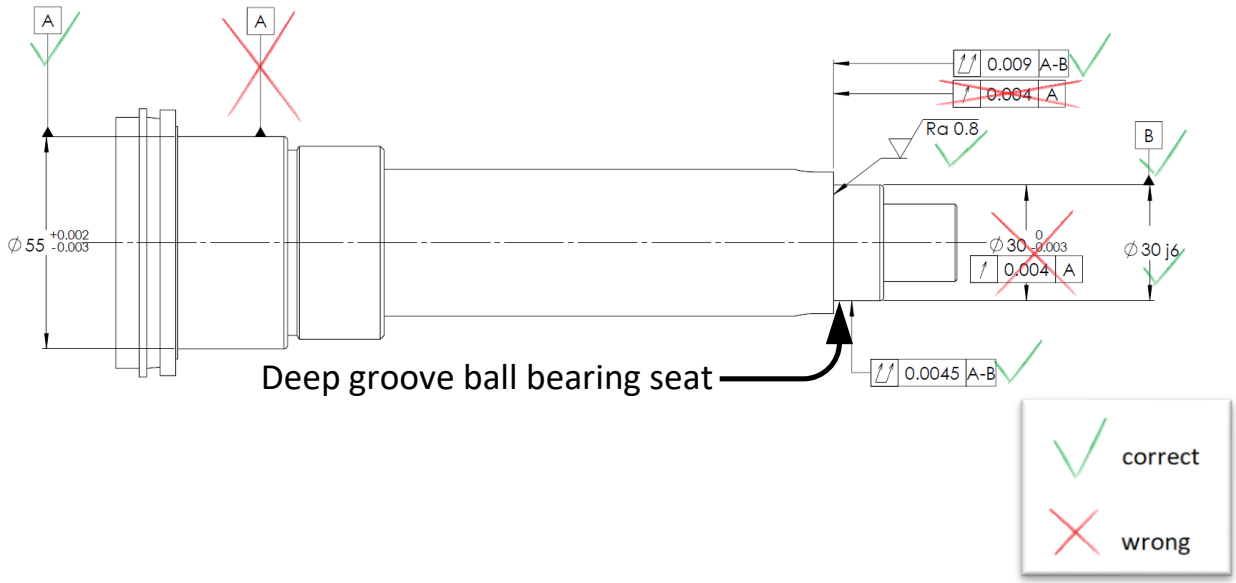

Figure 20. Tolerance correction on the right side of the shaft

Analogous revision on spindle pipe values from Figure 21 were taken and applied (Figure 22):

Tolerances for cast iron and steel housings – seats for radial bearings[1)]

	Conditions	Dimensional tolerance[2)3)]	Total radial run-out tolerance	Total axial run-out tolerance	Ra[6)]
		–	–	–	µm
For non-split housings only	**Rotating outer ring load**				
	Heavy loads on bearings in thin-walled housings, heavy peak loads (P > 0,1 C)	P7	IT6/2	IT6	3,2
	Normal to heavy loads (P > 0,05 C)	N7	IT6/2	IT6	3,2
	Light and variable loads (P ≤ 0,05 C)	M7	IT6/2	IT6	3,2

Figure 21. Spindle pipe seat tolerances for second bearing

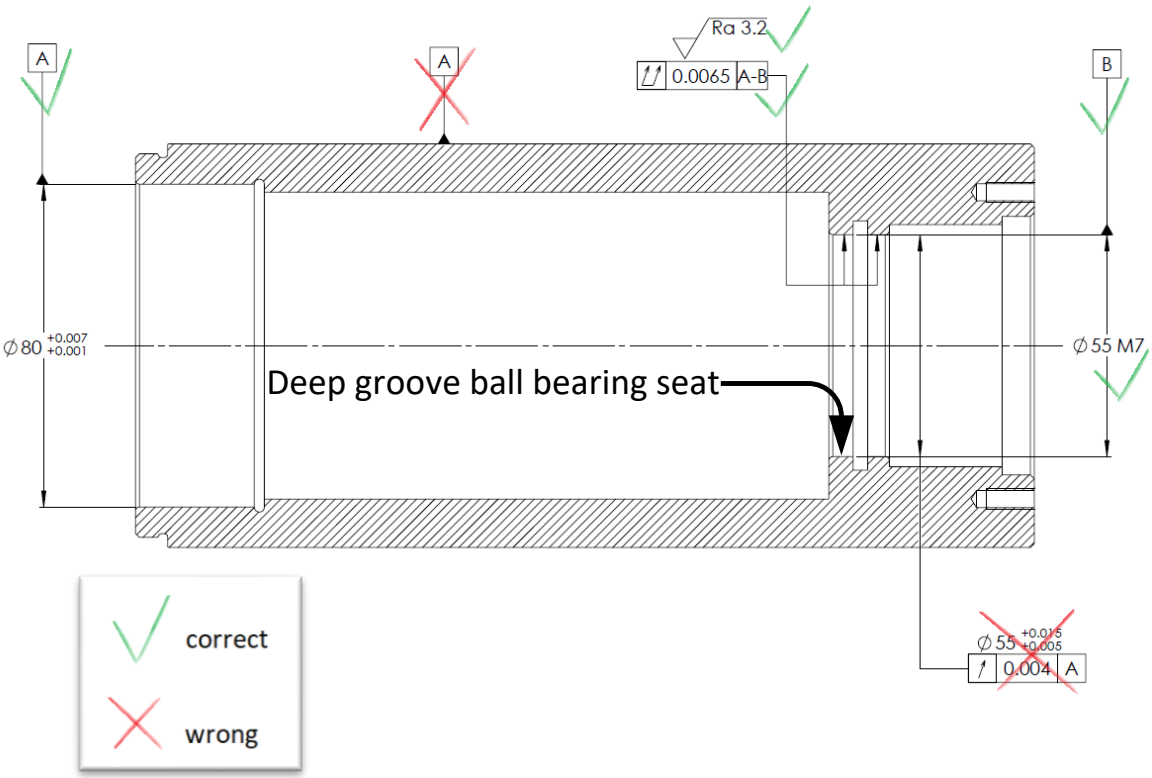

Figure 22. Tolerance correction on the right side of the spindle pipe.

3.2. HSK taper

On the drawing of the shaft is stated that the inner tapered surface is supposed to be tolerated according to DIN 69893 which is equal to ISO 12164-1:2001 - Hollow taper interface with flange contact surface — Part 2: Receivers. [6] However, it was tolerated in the improper way.

I changed the tolerances in the way it is prescribed in the ISO standards (Figure 23):

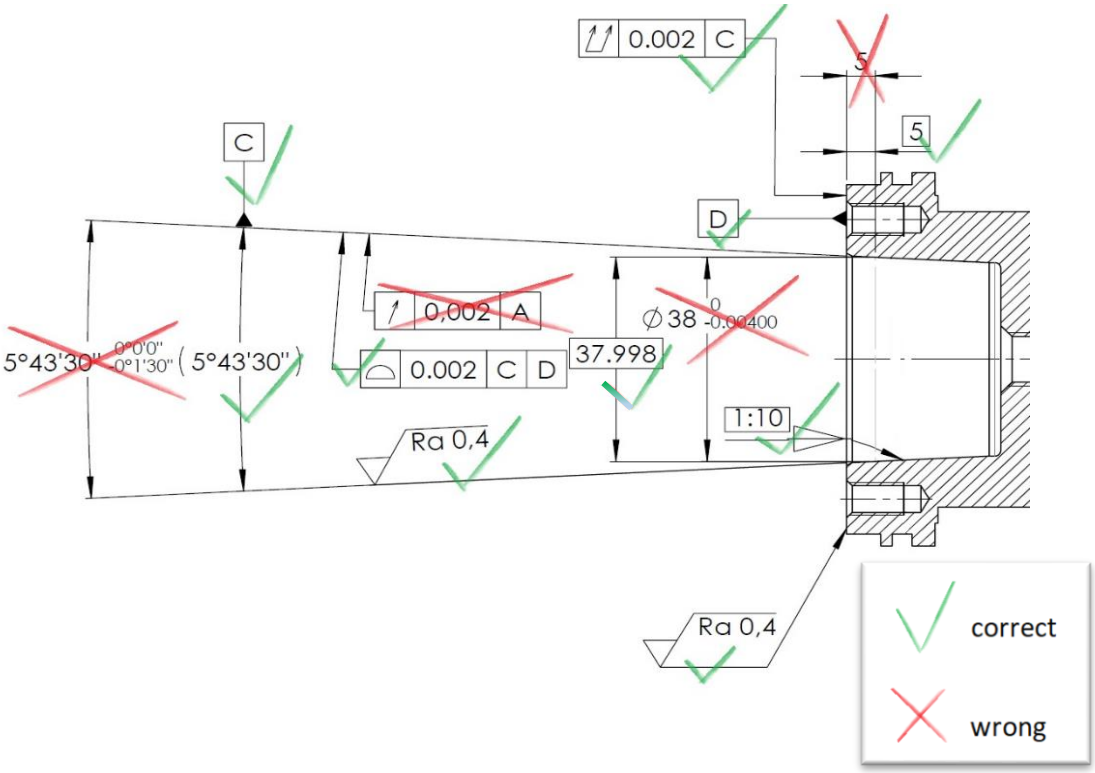

Figure 23. HSK correction.

But, doing this correction solves only one part of the problem, as there are two HSK parts to be mated together. The HSK flange, which is the part of another assembly, was not tolerated properly as well as its receiver. Moreover, another disadvantage of the assembly is that no clamping system is used. Unfortunately, changing tolerances of the HSK flange and deleloping the way of the HSK clamping is out of range of my work. That may cause the resulting functioning be different from the desirable one, which could have been reached by doing these two actions.

3.3. Linear dimensional chains

There are two important dimensional chains connected with the super-precision bearings. The guarantee of a clearance in certain places is necessary to keep the bearings properly pushed.

3.3.1. Linear dimensional chain 1

The first dimensional chain is in the Figure 24. The problem is to control if there always a clearance kept between the spindle and the nut. If it is so, bearings will be pushed in the proper way.

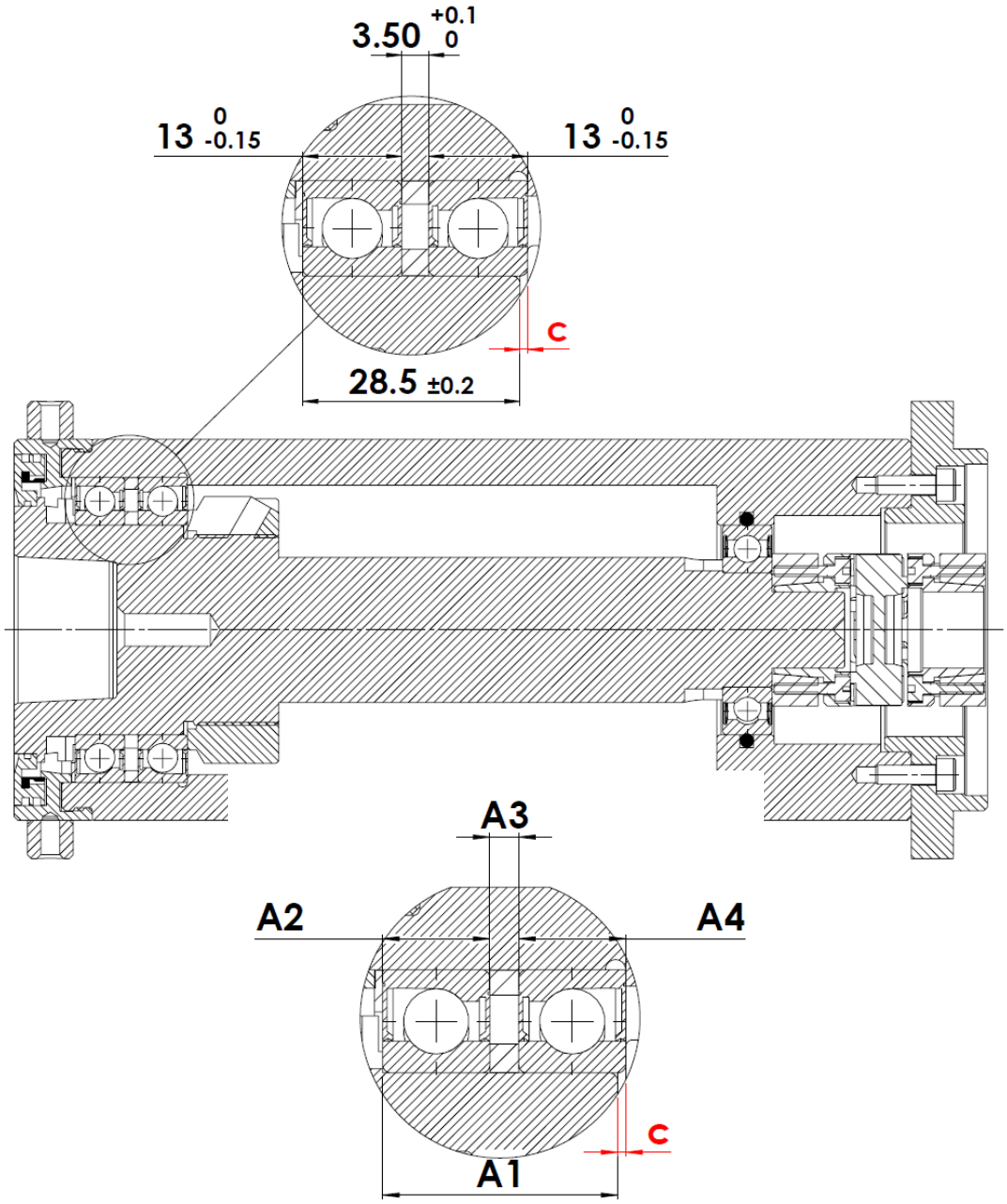

Figure 24. Dimensional chain 1

The clearance c is calculated in the following way:

$$c = A2 + A3 + A4 - A1 \quad (5)$$

In this chain, the increasing dimensions are A2, A3 and A4. A1 is the decreasing dimension.

The limits of clearance size are:

$$c_{max} = A2_{max} + A3_{max} + A4_{max} - A1_{min} = 13 + 3.6 + 13 - 28.3 = 1.3\ mm \quad (6)$$

$$c_{min} = A2_{min} + A3_{min} + A4_{min} - A1_{max} = 12.85 + 3.5 + 12.85 - 28.7 = 0.5\ mm \quad (7)$$

Hence, in the worst case the is still a clearance between the spindle and the nut. That means, the bearings will be pushed in the proper way and no problems will occur.

3.3.2. Linear dimensional chain 2

The clearance between spindle pipe and spindle bearing nut should be guaranteed to allow the nut to push on bearings, not spindle pipe. In the previous experience with the machine, the problems were occurring regarding this chain: two bearing spacer rings should be used instead of one to correct the issue. The chain itself is in the Figure 25.

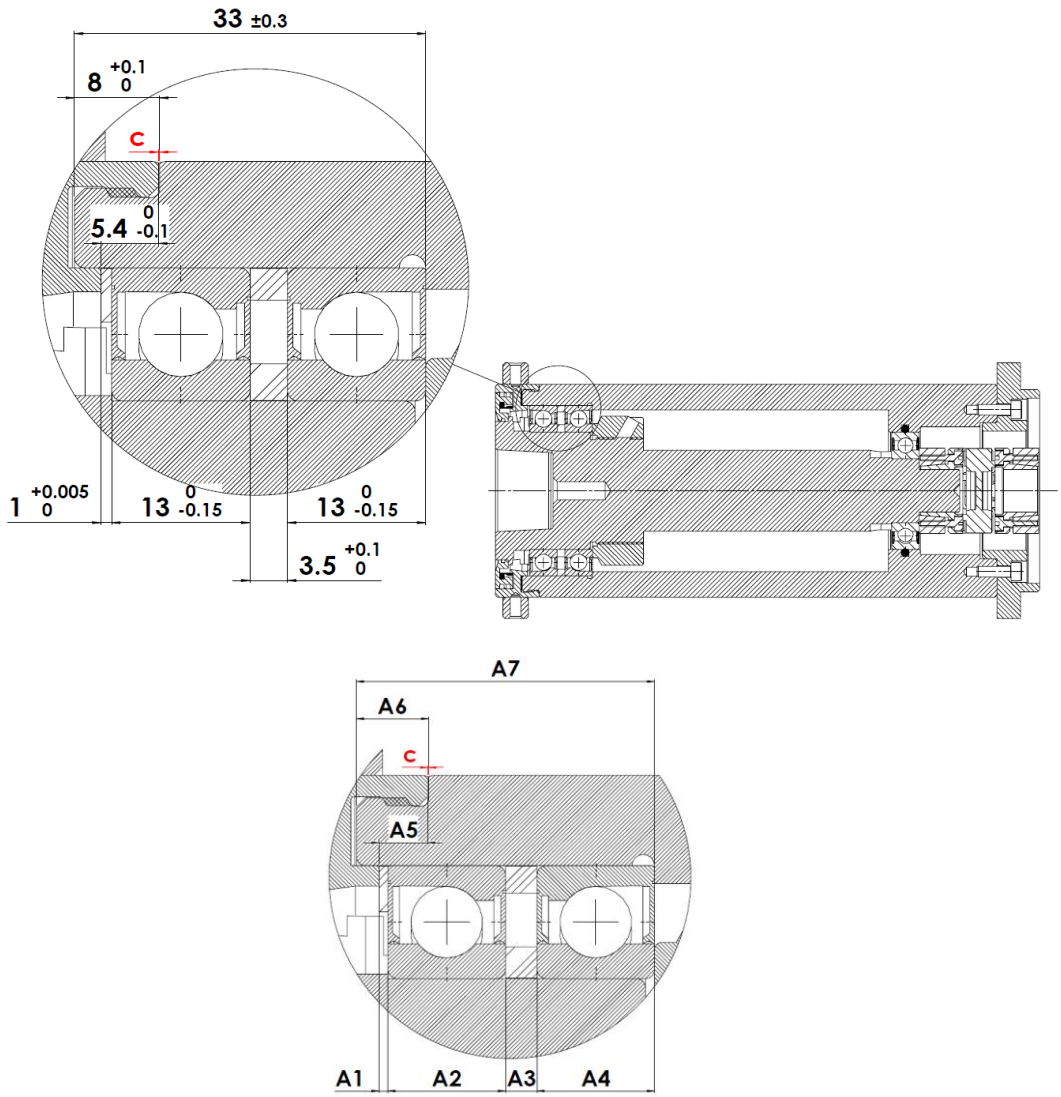

Figure 25. Dimensional chain 2

The clearance c is calculated in the following way:

$$c = A1 + A2 + A3 + A4 - A5 - (A7 - A6) \quad (8)$$

In this chain increasing dimensions are: A1, A2, A3, A4, A6. Decreasing dimensions are A5 and A7.

The limits of clearance size are:

$$c_{max} = A1_{max} + A2_{max} + A3_{max} + A4_{max} - A5_{min} - (A7_{min} - A6_{max}) = \\ = 1.005 + 13 + 3.6 + 13 - 5.3 - (32.7 - 8.1) = 0.705\ mm \quad (9)$$

$$c_{min} = A1_{min} + A2_{min} + A3_{min} + A4_{min} - A5_{max} - (A7_{max} - A6_{min}) = \\ = 1 + 12.85 + 3.5 + 12.85 - 5.4 - (33.3 - 8) = -0.5\ mm \quad (10)$$

In the worst case, there will be no clearance between the spindle pipe and spindle bearing nut. That means, the clearance will appear between the bearing spacer ring and spindle bearing nut – that explains the need to use the second bearing spacer ring. Otherwise, the bearings will not be pushed properly and a problem will appear.

The possible solution for this might be shortening the “33“ dimension on spindle pipe. Other possibility is to shorten „8“ dimension on spindle pipe or „5.4“ dimension on spindle bearing nut. Considering the fact that the latter two dimensions refer to a short thread, the optimal way is to change 33 mm to 32 mm though. The revised version of spindle pipe will carry this correction.

3.4. Precision lock nut

A slight change was applied to M50x1.5 thread. Thread precision was checked for consistency with the SKF prescriptions about lock nut KMTA-10, M55x1 (Figure 26). The nut itself has a 5H thread precision and the shaft thread precision is prescripted to be 6g [20]:

Mating shaft threads (recommendation)	**KM/KML** Metric thread, 6g: ISO 965-3 **HM/HME and HM .. T** Metric trapezoidal thread, 7e: ISO 2903

Figure 26. Recommendations for shaft thread [20]

As well as this, a concentricity tolerance was added to get thread axis to the same plane as shaft axis. Eliminating thread nonconcentricity will result in more even pressure distribution. The result is in the Figure 27.

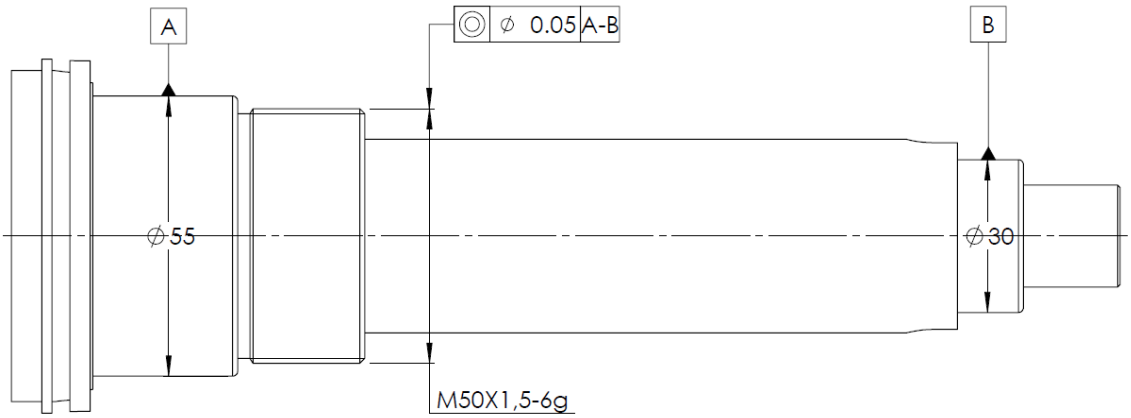

Figure 27. Thread tolerances

3.5. Holes position tolerances

In the assembly , the spindle motor flange is connected to the spindle pipe by eight DIN 912 M5x16 bolts. The tolerance of true position for the holes was initially stated as it in in the Figure 28 and Figure 29:

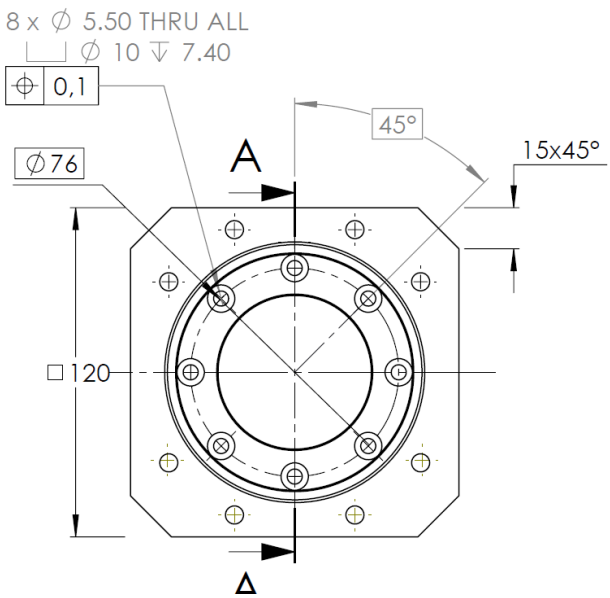

Figure 28. Initial tolerances of true position - flange

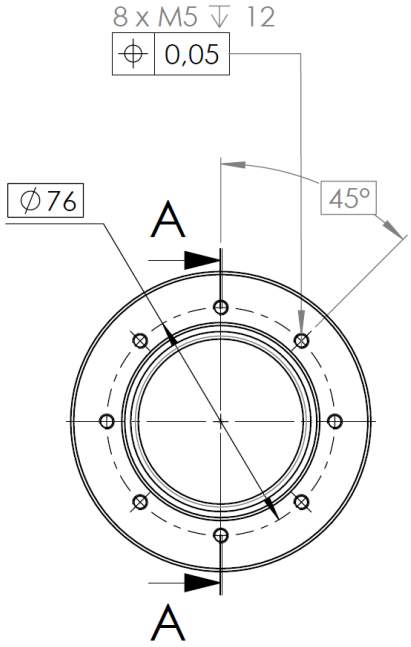

Figure 29. Initial tolerance of true position - spindle pipe

But actually, the right way to determine the true position tolerance for holes in bolted flange connections is to use the following general formula:

$$T = \frac{c_1 + c_2}{2} \qquad (11)$$

where T is the resultant position tolerance value, c_1 is the clearance of the first hole, c_2 is the clearance of the second hole. In our particular case, the clearance of the second hole is zero, because the hole has a thread. [15]

Thus, the tolerance is:

$$T = \frac{0.5+0}{2} = 0.25\ mm. \tag{12}$$

In accordance with the rules of flange mating stated in the theoretical part, I added projected tolerance zone to the holes on the flange (Figure 30) and maximum material condition to the threaded holes on the spindle pipe (Figure 31).

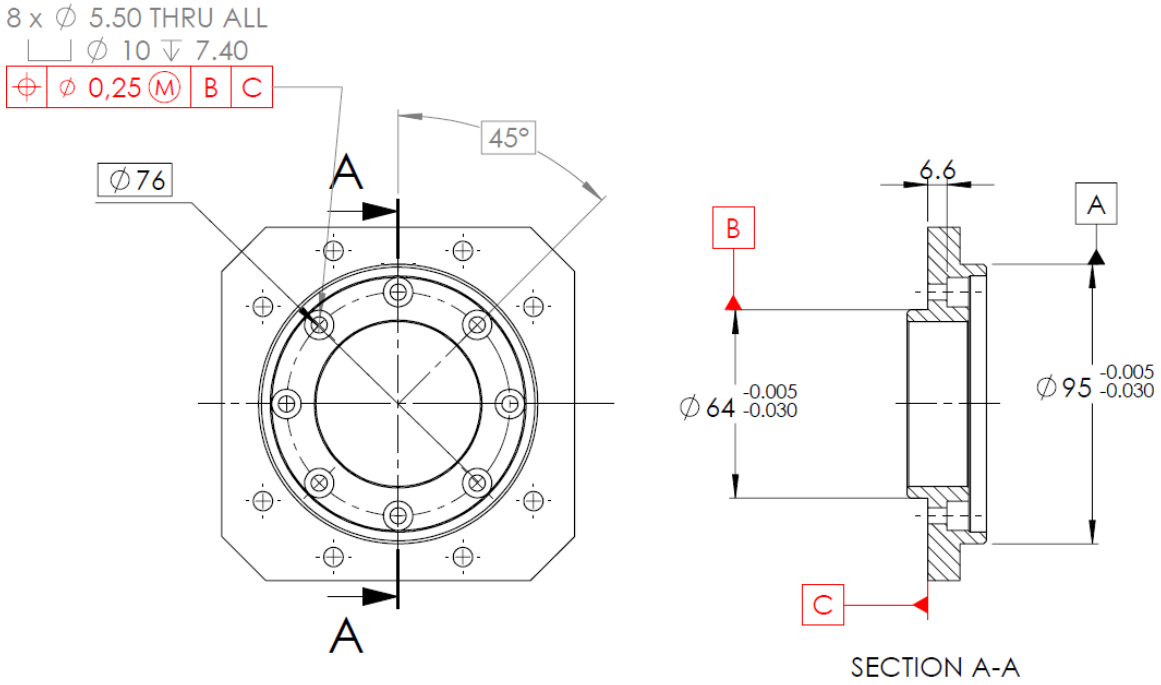

Figure 30. Flange after tolerances correction

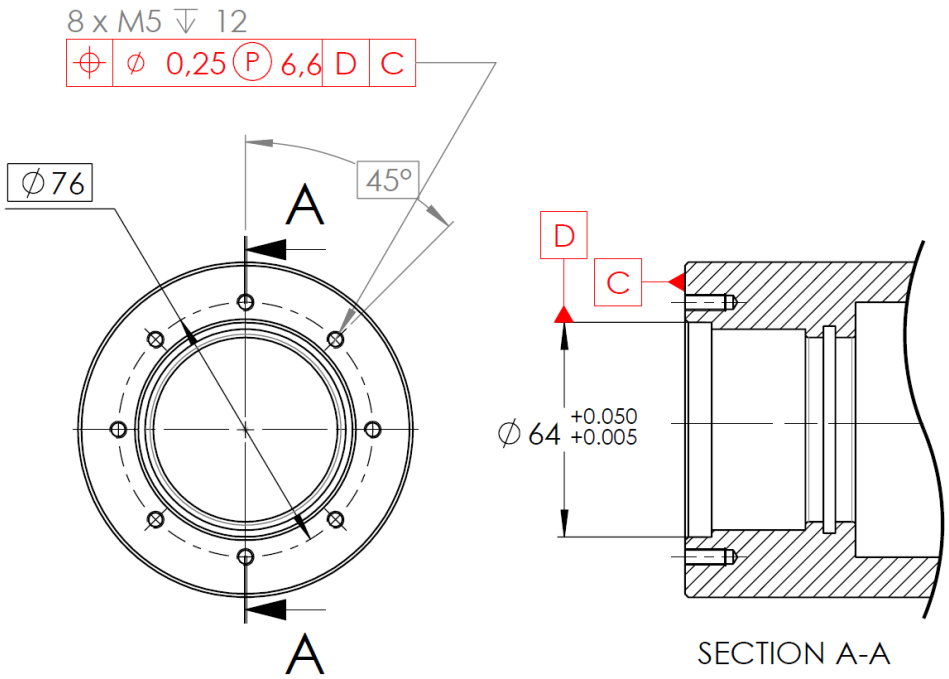

Figure 31. Spindle pipe after tolerances correction

Things will be different if we look at the holes on the "tool" side of the spindle (Figure 32), which are used to connect the grinding spindle assembly with the toolholding flange (Figure 33).

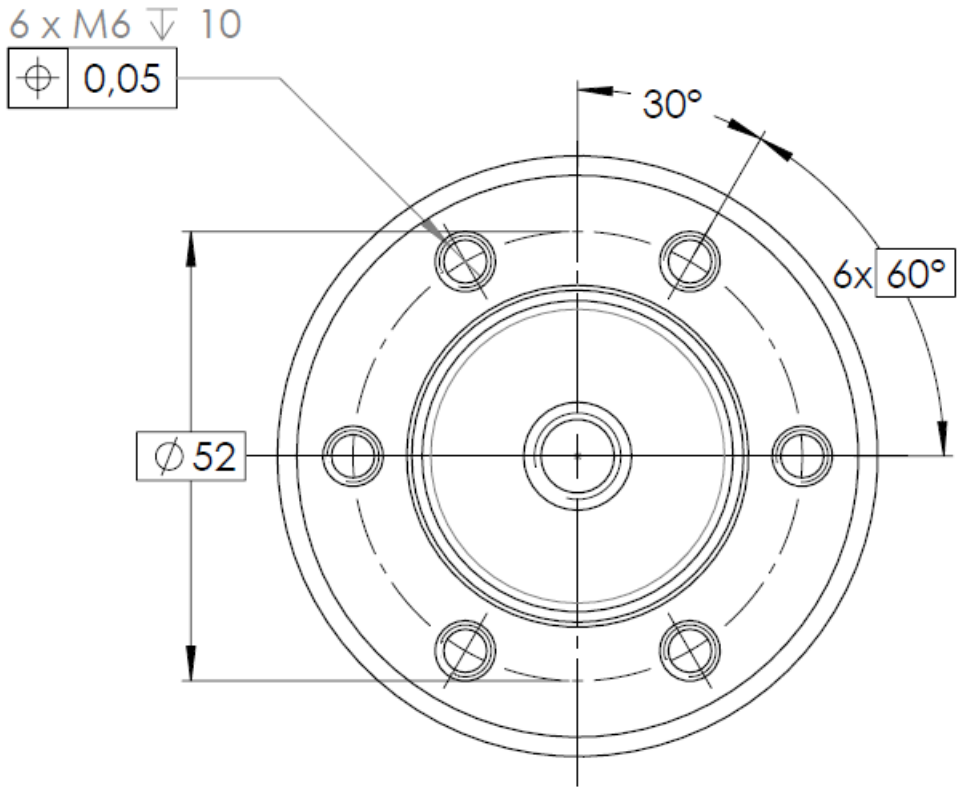

Figure 32. Shaft: holes for connection with toolholder

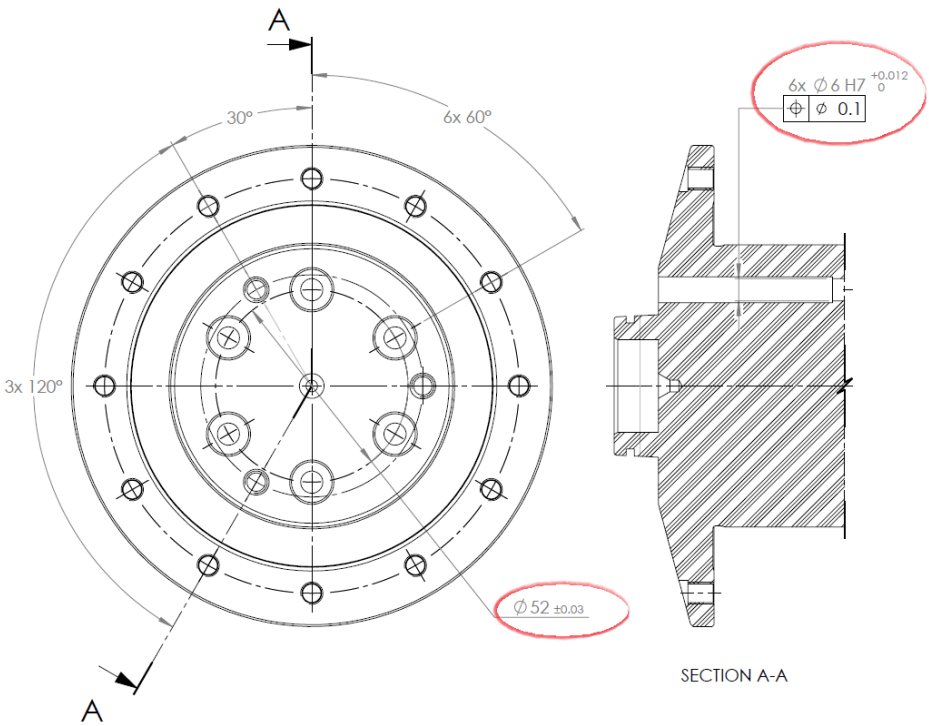

Figure 33. Flange: holes for connection with spindle assembly

The tolerances of the mating holes do not match. Unfortunately, I am not able to make any changes to tolerances on the toolholder, I can only correct the shaft tolerances. I added datums A and D. The first one ensures that the holes will be parallel with the shaft axis, and the other one will ensure that the perpendicularity of the holes is within the tolerance. (Figure 34)

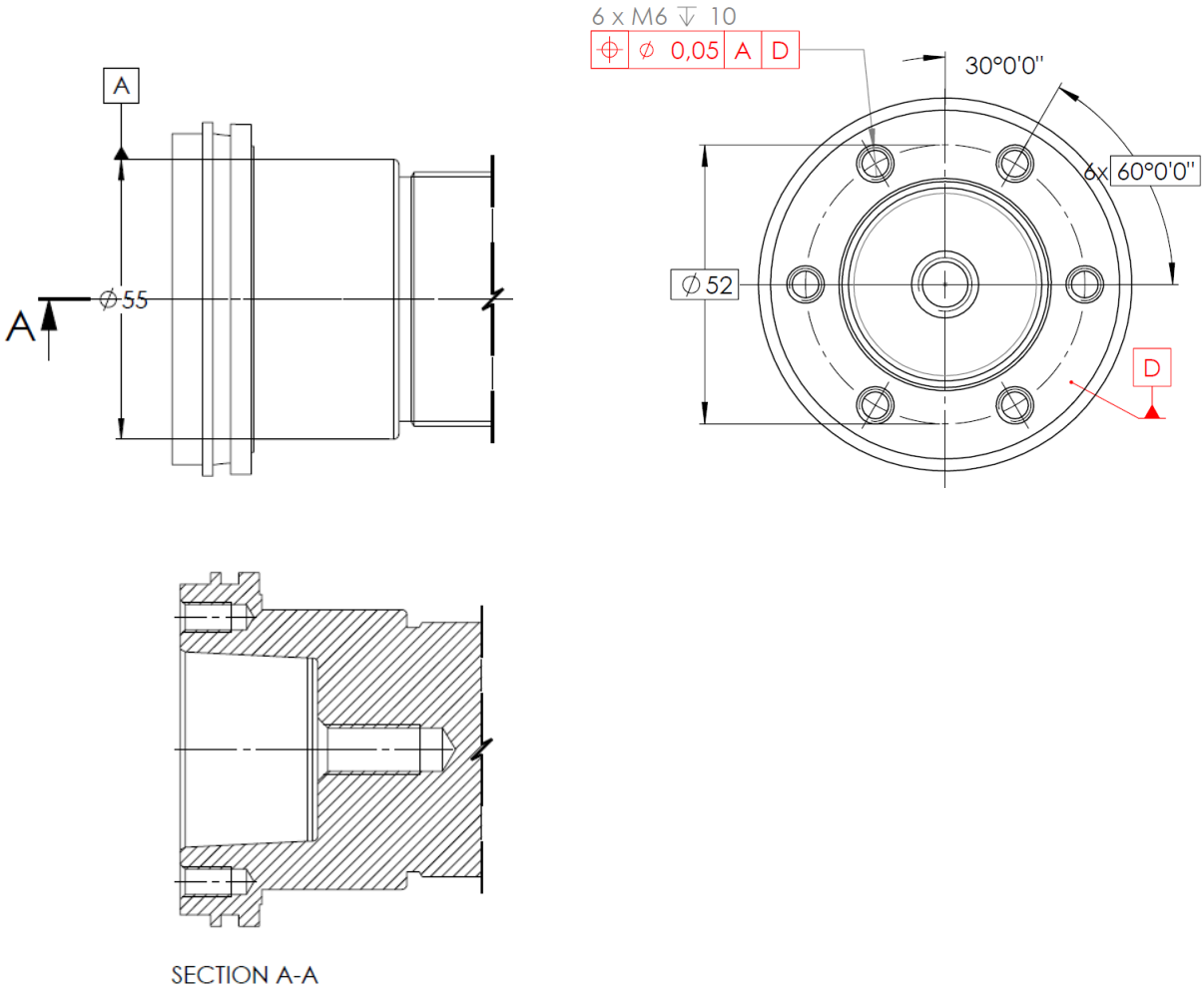

Figure 34. Shaft: corrected hole position tolerances

3.6. Coupling

Calculating tolerances, which refere to coupling connection are more complicated task, as you have to take into account both „sides“ of it. The assembly examined in my work is only a part of the connection (numbers 1 and 2 in Figure 35**Error! Reference source not found.**). The coupling connects the spindle, which is closer to motor, with the grinding spindle.

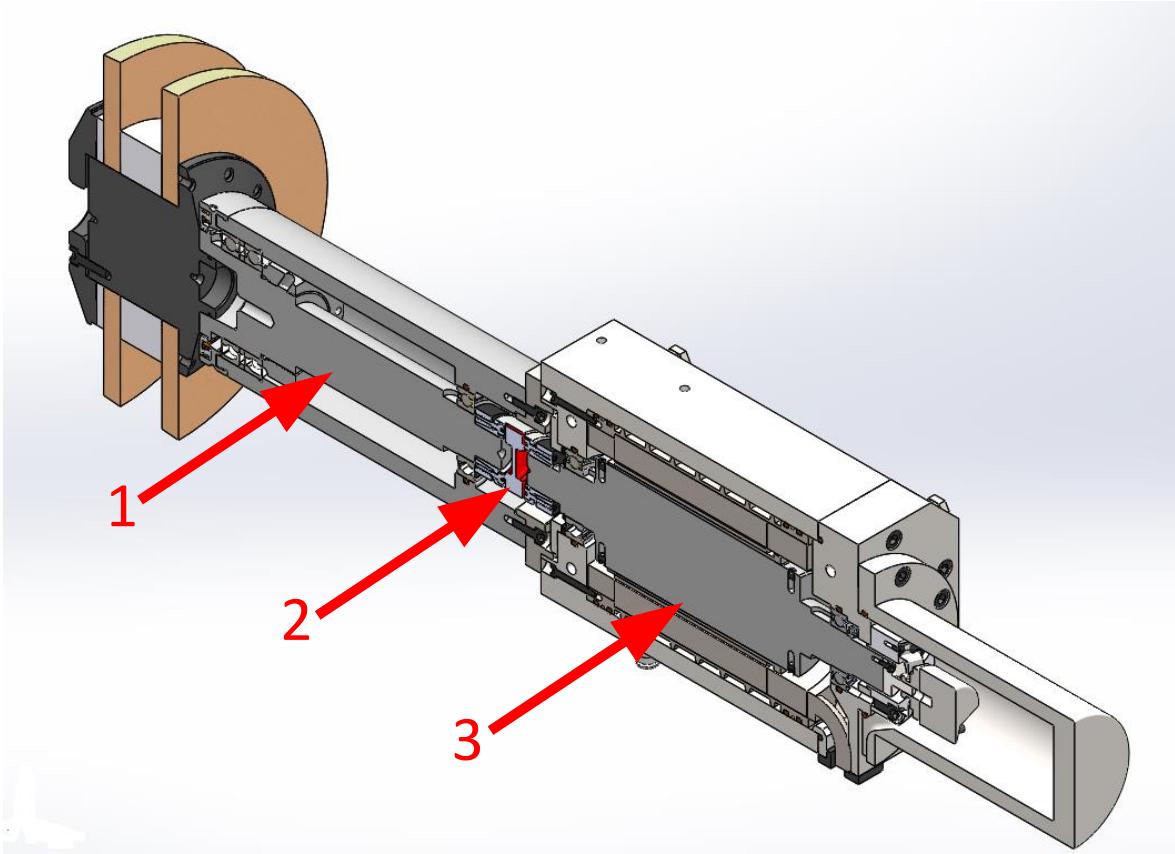

Figure 35. Coupling connection: 1 - grinding spindle; 2 – coupling; 3 - motor spindle

The manufacturer of the spindle coupling stated the following range of allowed misalignment (Figure 36, Figure 37):

Maximum Misalignment

KBK servo insert couplings compensate lateral, axial and angular shaft misalignment.

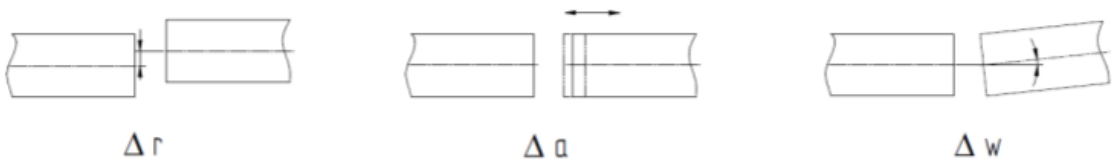

Figure 36. Coupling misalignment [23]

Zahnkränze zu Kupplungen Typ KBE

Größe	Zahnkranz	Drehmoment [Nm]	Drehfedersteife statisch [Nm/rad]	Drehfedersteife dynamisch [Nm/rad]	Versatz axial [mm]	Versatz radial [mm]	Versatz angular [Grad]
5	92 ShA	0.5	5.16	16	+0.4/-0.2	0.06	1.0°
	98 ShA	0.9	8.3	25	+0.4/-0.2	0.04	0.9°
7	80 ShA	0.7	8.6	26	+0.6/-0.3	0.15	1.1°
	92 ShA	1.2	14.3	43	+0.6/-0.3	0.10	1.0°
	98 ShA	2.0	22.9	69	+0.6/-0.3	0.06	0.9°
	64 ShD	2.4	34.3	103	+0.6/-0.3	0.04	0.8°
9	80 ShA	1.8	17.2	52	+0.8/-0.4	0.19	1.1°
	92 ShA	3.0	31.5	95	+0.8/-0.4	0.13	1.0°
	98 ShA	5.0	51.6	155	+0.8/-0.4	0.08	0.9°
	64 ShD	6.0	74.6	224	+0.8/-0.4	0.05	0.8°
14	80 ShA	4.0	60.2	180	+1.0/-0.5	0.21	1.1°
	92 ShA	7.5	114.6	344	+1.0/-0.5	0.15	1.0°
	98 ShA	12.5	171.9	513	+1.0/-0.5	0.09	0.9°
	64 ShD	16.0	234.2	702	+1.0/-0.5	0.06	0.8°
19	80 ShA	4.9	618	1065	+1.2/-0.5	0.15	1.1°
	92 ShA	10.0	1090	1815	+1.2/-0.5	0.10	1.0°
	98 ShA	17.0	1512	2540	+1.2/-0.5	0.06	0.9°
	64 ShD	21.0	2560	3810	+1.2/-0.5	0.04	0.8°

Figure 37. Maximum misalignment value [24]

The proper way to calculate maximum shaft misalignment, that coupling can compensate, is to consider, how much each shaft can actually deviate from the axis, then find how much they can deviate from each other (relatively) -Figure 38, Figure 39:

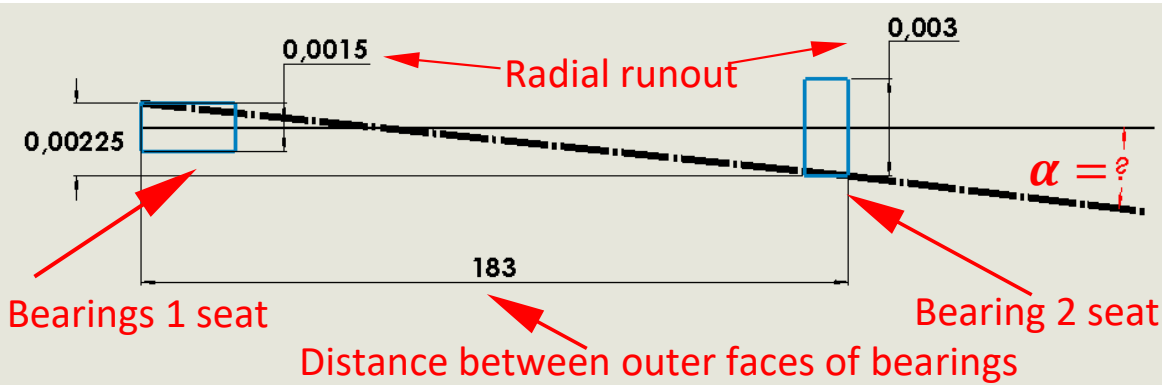

Figure 38. Grinding spindle angular misalignment

$$tg\alpha = \frac{0{,}0025}{183}, \alpha = 0{,}0007° \qquad (13)$$

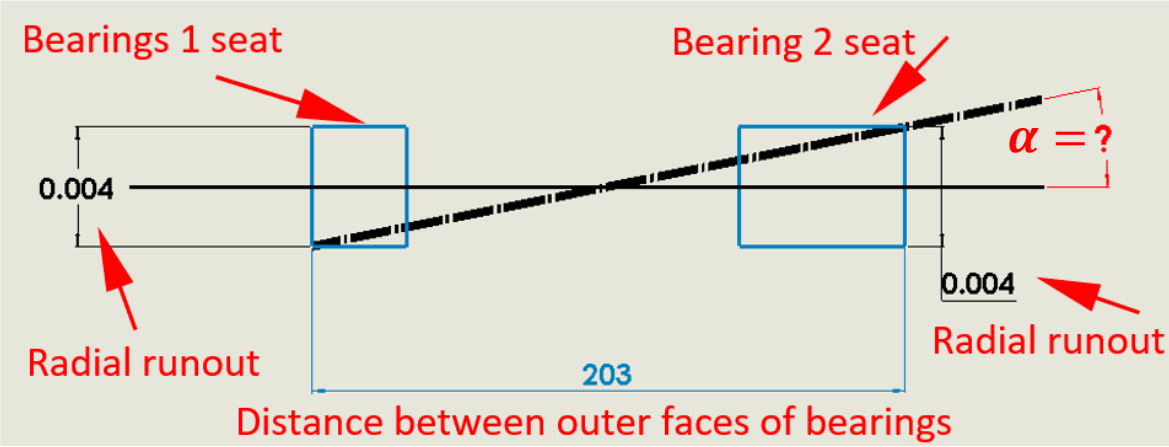

Figure 39. Motor spindle angular misalignment

$$tg\alpha = \frac{0{,}004}{203}, \alpha = 0{,}001° \qquad (14)$$

Both angles are very small, so misalignment will be negligible.

But the other thing to consider is a problem connected with the second shaft's tolerances. In the drawing (Figure 40) there are no stated runout tolerance on the "20" diameter, which is inserted into a coupling.

If runout tolerane is not specificated on a drawing, it refers to ISO 2768-1:1989: General tolerances — Part 1: Tolerances for linear and angular dimensions without individual tolerance indications [21]. For precision class K, the circular runout is 0.2, so the axis of the inserted cylinder can deviate up to 0.1 mm (Figure 41), and it is extremely undesirable, as 0.1 is the biggest permitted misalignment.

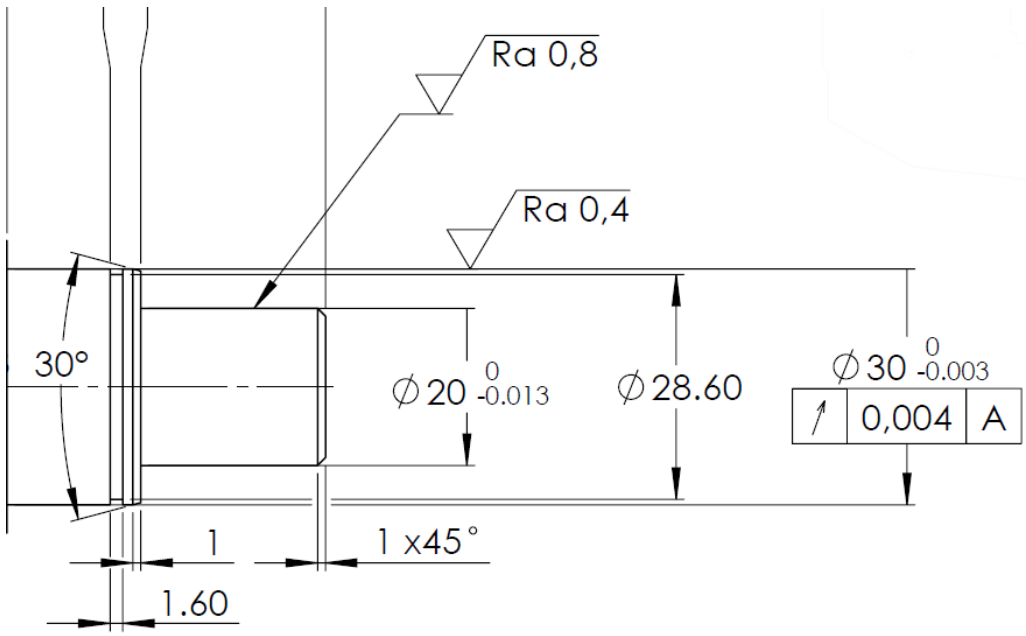

Figure 40. Motor spindle drawing - no stated runout tolerance

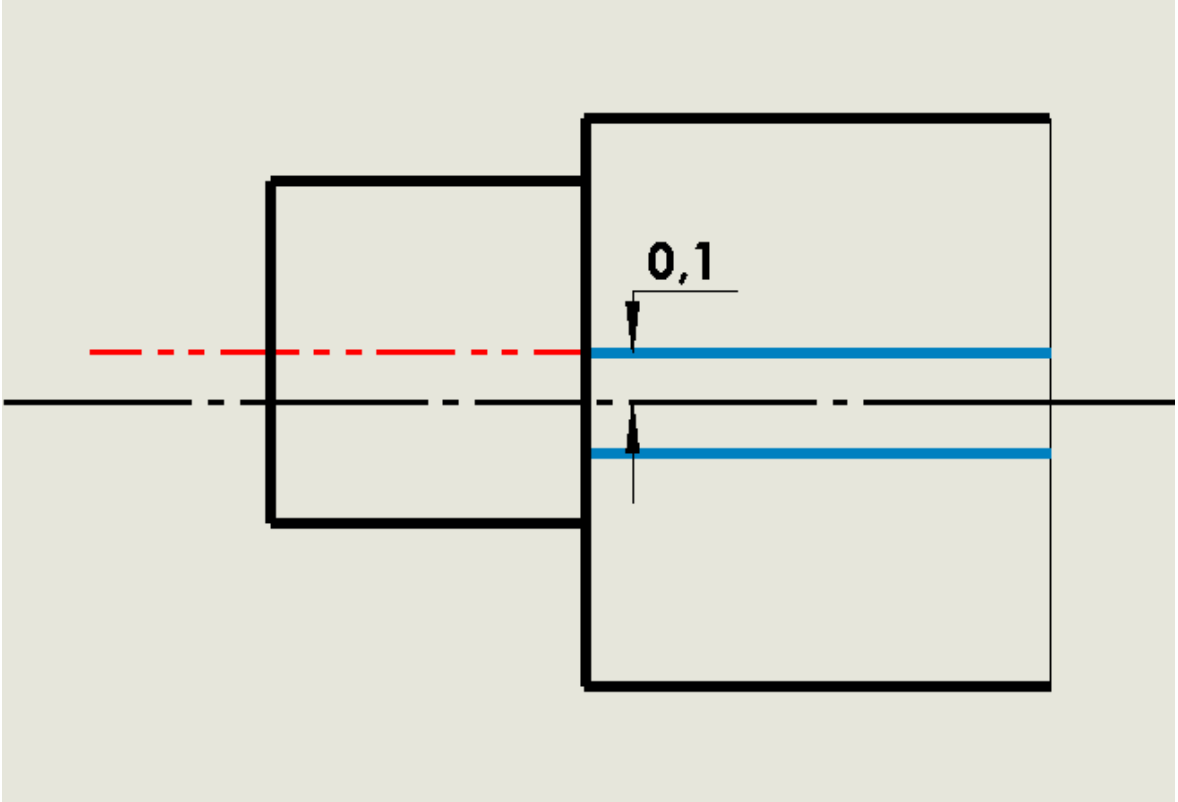

Figure 41. Allowed axes deviation

To improve this problem, several corrections should be made on the motor spindle drawing, the most important one is, of course, adding tighter runout tolerance to the inserted surface.

However, this problem is off the scope of my thesis. The possible reasonable correction is to tighten tolerances on the spindle arbor. For the test version of the spindle, I added 0.02 runout tolerance to the inserted surface. That means, there will be almost no deviation from the side of the first shaft. That is supposed to balance out the possible high deviations from the motor side.

This solution (Figure 42) is temporary. In further machine assemblies revisions, I would recommend putting runout tolerances on the motor shaft and loosen tolerances on the grinding shaft.

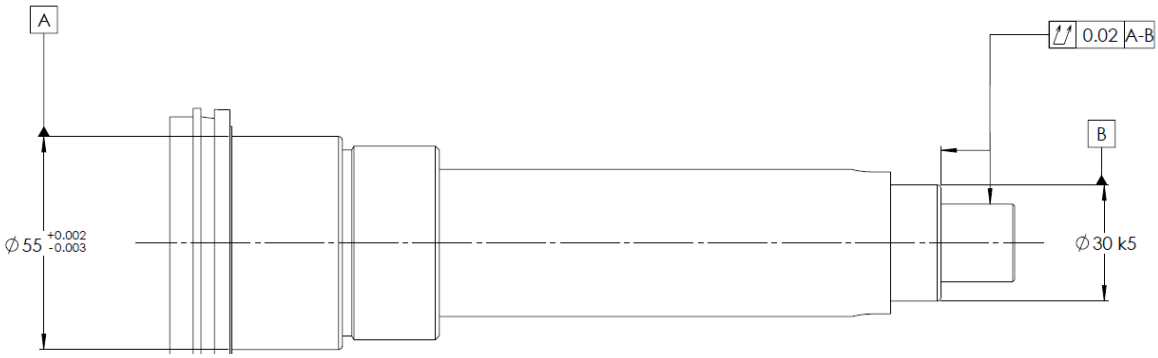

Figure 42. Shaft runout tolerances for coupling

4. Conclusions and Future Prospectives

This bachelor thesis was aimed to figure out the existing problems regarding the grinding spindle assembly and to suggest the possible solutions. The biggest part of the detected problems was in tolerances.

The spindle arbor needed to correct the tolerances of bearing seats (geometrical tolerances, diameter tolerances), surface roughness for one of the bearing seats, HSK taper geometrical tolerances, thread tolerance, holes position geometrical tolerances and tolerances for optimization of coupling connection.

The spindle pipe needed to correct the tolerances of bearing seats (geometrical tolerances, diameter tolerances), holes position tolerances. One dimension need to be changed due to the incorrectly designed linear dimensional chain.

The spindle motor flange needed to correct the holes position tolerances.

After the consultation with an SKF expert it has also been stated, that the wrong deep groove ball bearings were used.

I have applied all of above stated changes to the parts of the assembly and purchased new bearings.

Moreover, I found further problems, which refer to the parts from assemblies other than grinding spindle assembly and therefore are out of the scope of this thesis, but nevertheless they are connected with the spindle assembly to a large extent: wrong HSK flange, absence of HSK clamping system and absence of tolerances for motor spindle coupling connection.

In the nearest future this work will find its application in manufacturing the revised parts and using them in the assembly. The revised assembly is expected to show better result (less vibration and heat) during machine operation compared to the initial one. The problems with mounting are expected to be solved as well.

References

[1] 2. Bearing Selection, and Shaft and Housing Design. *NTN Co., Ltd. | Bearings, drive shafts, precision instrument products, etc.* [online]. 2004 [cit. 2019-05-04]. Dostupné z: https://www.ntn.co.jp/jimtof2004/eng/pdf/PrecisionBrgs-e/PrecisionBrgs-e-005.pdf

[2] POPOLI, William. High Speed Spindle Design and Construction. *Modern Machine Shop* [online]. 1998 [cit. 2019-05-04]. Dostupné z: https://www.mmsonline.com/articles/high-speed-spindle-design-and-construction

[3] *White Papers & Technical Information: Bearing Lubrication* [online]. In: . Montville, NJ: AST Bearings LLC, 2010 [cit. 2019-05-12].

[4] Bearing FAQ: What is a Deep Groove Ball Bearing?. *GGB Bearing Technology* [online]. b.r. [cit. 2019-05-12]. Dostupné z: https://www.ggbearings.com/en/faq/what-deep-groove-ball-bearing

[5] *ISO 12164-1:2001 - Hollow taper interface with flange contact surface— Part 1: Shanks — Dimensions*. b.r.

[6] *ISO 12164-2:2001 - Hollow taper interface with flange contact surface - Part 2: Receivers - Dimensions*. b.r.

[7] MANDRINI 2017EZ. *R.I.L. S.r.l. | Unipersonale* [online]. 2017 [cit. 2019-05-04]. Dostupné z: http://www.ril-srl.it/it-it/cataloghi_it/prodotti/yamaken-downloads/send/32-yamaken/233-mandrini-2017sgerer

[8] WECK, Manfred a I. SCHUBERT. New Interface Machine/Tool: Hollow Shank. *CIRP Annals* [online]. 1994 [cit. 2019-05-04]. DOI: 10.1016/S0007-8506(07)62228-8. Dostupné z: https://doi.org/10.1016/S0007-8506(07)62228-8

[9] AOYAMA, Tojiro a Ichiro INASAKI. Performances of HSK Tool Interfaces under High Rotational Speed. In: *CIRP Annals* [online]. 2001 [cit. 2019-05-04]. DOI: 10.1016/S0007-8506(07)62122-2. Dostupné z: https://doi.org/10.1016/S0007-8506(07)62122-2

[10] LIU, Xue, Jian LUO a Ai LI. Contact Analysis of HSK Toolholder-Spindle Interface. *Applied Mechanics and Materials* [online]. Zurich, 2012 [cit. 2019-05-04]. DOI: 10.4028/www.scientific.net/AMM.236-237.422. Dostupné z: https://search-proquest-com.ezproxy.techlib.cz/docview/1442528619/fulltextPDF/FD42476031604773PQ/1?accountid=119841

[11] VASILASH, Gary. On HSK. *Cincinnati* [online]. 1995 [cit. 2019-05-05]. Dostupné z: https://search-proquest-com.ezproxy.techlib.cz/docview/217442764?pq-origsite=summon

[12] *Shaft alignment basics (WE140): SKF online course* [online]. In: . b.r. [cit. 2019-05-07].

[13] BHATIA, Kishor. Projected Tolerance Zone Concept-GD&T: Training by Kishor Bhatia. In: *Engineering Tolerance | Cartesian Coordinate System www.scribd.com* [online]. Scribd Inc., 2019 [cit. 2019-05-11]. Dostupné z:

https://www.scribd.com/presentation/168526743/Projected-Tolerance-Zone-Concept-GD-T

[14] *ISO 1101:2017 - Geometrical product specifications (GPS) — Geometrical tolerancing — Tolerances of form, orientation, location and run-out*. b.r.

[15] *Engineering Design II.: Geometrical tolerances* [online]. In: . Faculty of Mechanical Engineering Department of Designing and Machine Components, b.r. [cit. 2019-05-11].

[16] *Engineering Design II.: Dimensional Loops* [online]. In: . Faculty of Mechanical Engineering Department of Designing and Machine Components, b.r. [cit. 2019-05-12].

[17] *Super-Precision Bearings Catalogue: High-speed, B design, sealed as standard* [online]. SKF Group, 2016 [cit. 2019-05-12]. Dostupné z: https://www.skf.com/group/knowledge-centre/media-library/index.html#tcm:12-75457

[18] *Rolling bearings* [online]. In: . SKF Group, 2018 [cit. 2019-05-12].

[19] *Designation system* [online]. SKF Group, b.r. [cit. 2019-05-12]. Dostupné z: https://www.skf.com/uk/products/bearings-units-housings/engineered-products/hybrid-bearings/designation-system/index.html

[20] *Lock nuts requiring a keyway: Product data* [online]. SKF Group, b.r. [cit. 2019-05-12]. Dostupné z: https://www.skf.com/group/products/bearings-units-housings/bearing-accessories/lock-nuts/requiring-keyway/product-data/index.html

[21] *ISO 2768-1:1989: General tolerances — Part 1: Tolerances for linear and angular dimensions without individual tolerance indications*. b.r.

[22] HSK-A/C/E100+B/D/F125 Axial-Clamp Manual Gripper, Version B (Direct Installation). In: *TAC Rockford* [online]. b.r. [cit. 2019-05-05]. Dostupné z: https://tacrockford.com/product/hsk-axial-clamping-manual-grippers-for-direct-installation/part/685.AZS.100.B00/#image

[23] *Operating and Assembly Instructions Couplings Series KBE: Coupling Series KBE3C* [online]. KBK Antriebstechnik GmbH, b.r. [cit. 2019-05-12]. Dostupné z: http://www.kbk-antriebstechnik.de/fileadmin/Downloads/Montageanleitungen/Elastomerk._englisch/Montageanleitung_KBE3C.pdf

[24] *Zahnkränze zu Kupplungen Typ KBE*. 32 KBK Antriebstechnik GmbH. b.r.

[25] *Tolerance Analysis of Linear Dimensional Chains* [online]. b.r. [cit. 2019-05-30]. Dostupné z: http://www.mitcalc.com/doc/tolanalysis1d/help/en/tolanalysis1dtxt.htm

List of Figures

List of Appendices