CZECH TECHNICAL UNIVERSITY IN PRAGUE

FACULTY OF CIVIL ENGINEERING

DEPARTMENT OF INDOOR ENVIRONMENTAL AND BUILDING SERVICES ENGINEERING

HVAC IN AN OFFICE BUILDING

TECHNICAL SPECIFICATIONS

Bc. DOMINIKA CALDERWOOD

2018/2019

MANDÍK®

LARGE-AREA VENT

VPVM

These technical conditions define a series of the manufactured sizes and versions of the following large-area vents (hereinafter vents): VPVM − K 400, 600, 800, 1000, 1200, 1480, VPVM − S 400, 600, 800, 1000, 1200, 1500, 2000, VPVM − R 800, 1000, 1200, 1400, 1600, 2000 , heights of 750, 1000, 1250, 1500 and 2000 mm. They apply to manufacturing, designing, ordering, deliveries, installation and operation.

I. CONTENT

II. GENERAL **2**

1. Description..... 2

2. Design..... 2

3. Dimensions and weights..... 2

4. Placement and installation..... 4

III. TECHNICAL DATA **4**

5. Basic parameters..... 4

6. Calculation and determination quantities..... 5

IV. ORDERING INFORMATION **10**

7. Ordering key..... 10

V. MATERIAL, FINISHING **10**

8. Material..... 10

VI. PACKING, TRANSPORT AND STORAGE **10**

9. Logistical data..... 10

I. GENERAL

1. Description

1.1. Large-area vents are terminal air−conditioning elements for the distribution of air in air−conditioned and ventilated rooms.

They are intended for the inlet of treated outdoor air directly into the living (working) area.

In order to ensure stabilized air flow in the living area, the temperature of inlet air must be lower by 1 to 3°C then the temperature of air in the ventilated room.

Outdoor air is let in with low velocity at the floor, to take harmful substances from the living area to ceiling.

1.2. The vents are intended for environment protected against weather impacts with the classification of climatic conditions class 3K5, without condensation, frost, ice formation, and without water even from other sources than rain according to EN 60 72133, change A2.

Air flow must have a temperature between -20 to +70 °C.

Vents are suitable for systems without abrasive, chemical and adhesive particles.

1.3. If is not noticed other way, all dimensions and weight are in millimeters and kilograms.

2. Design

2.1. The following types of vents are supplied: round outlets to be installed into a space, wall−mounted outlets with semi−circled ground plan, and corner vents with quarter−circled ground plan. Piping is connected to vents from above to round connecting socket. Vents are supplied with or without control flaps.

3. Dimensions and weights

3.1. Dimensions

Tab. 3.1.1 Round vent VPVM - K

Size	ØA	ØD
400	400	313
600	600	498
800	800	558
1000	1000	628
1200	1200	708
1480	1480	798

Height H: 750, 1000, 1250, 1500 and 2000 mm

Fig. 1

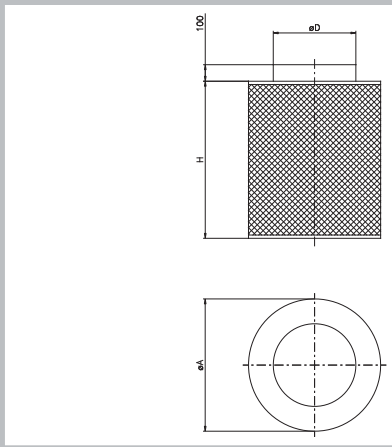

Tab. 3.1.2. Wall−mounted vent VPVM - S

Size	A	B	C	⌀D
400	400	330	155	248
600	600	490	235	398
800	800	550	265	448
1000	1000	620	290	498
1200	1200	700	320	558
1500	1500	850	370	628
2000	2000	1100	480	798

Height H: 750, 1000, 1250, 1500 a 2000 mm

Fig. 2

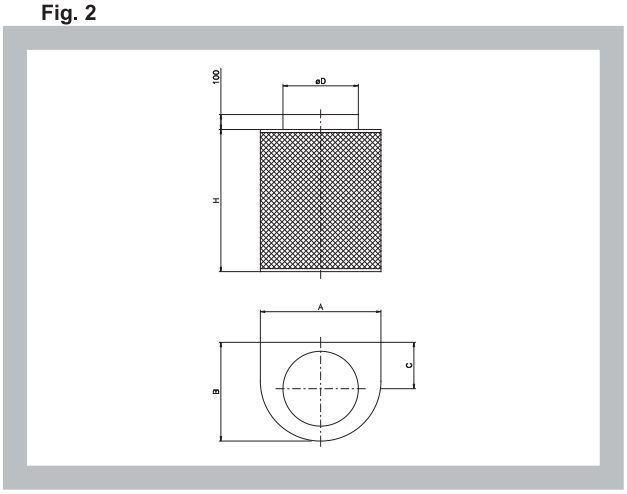

Tab. 3.1.3. Corner vent VPVM - R (90°)

Size	A	C	⌀D
800	400	170	248
1000	500	210	313
1200	600	250	398
1400	700	290	448
1600	800	330	448
2000	1000	390	498

Height H: 750, 1000, 1250, 1500 and 2000 mm

Fig. 3

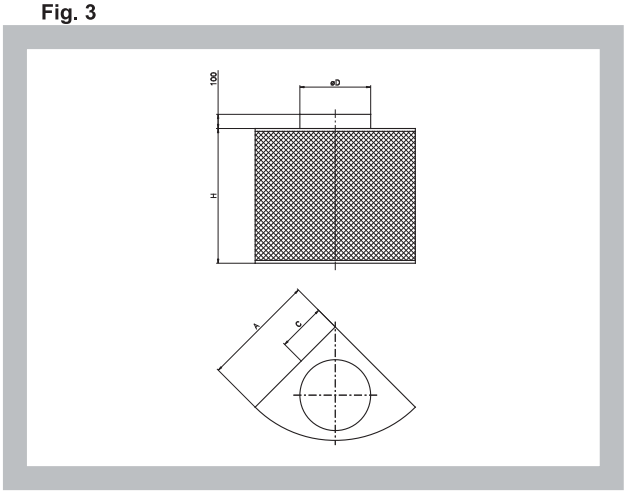

3.2. Weights

Tab. 3.2.1. Weights [kg]

	Size	Vent height					Control
		750	**1000**	**1250**	**1500**	**2000**	
VPVM-K	400	8,8	11,0	13,0	14,5	18,5	0,8
	600	14,0	17,0	20,0	23,0	29,0	1,7
	800	20,0	24,0	27,0	31,0	38,0	2,0
	1000	27,0	31,0	35,5	40,0	48,5	2,5
	1200	35,0	40,0	45,0	50,0	60,0	3,0
	1480	46,5	53,0	59,0	65,0	77,0	3,7
VPVM-S	400	11,0	13,0	16,0	18,5	24,0	0,6
	600	17,0	21,0	25,0	29,0	37,0	1,2
	800	21,0	26,0	30,0	35,0	44,0	1,4
	1000	25,5	31,0	36,0	41,5	52,0	1,6
	1200	30,5	36,5	43,0	49,0	61,0	2,0
	1500	37,0	47,0	54,5	62,0	76,5	2,5
	2000	58,0	67,0	77,0	86,0	106,0	3,7
VPVM-R	800	12,0	15,0	17,5	20,5	26,5	0,6
	1000	15,0	19,0	22,5	26,0	33,5	0,8
	1200	19,0	23,5	28,0	32,0	41,0	1,2
	1400	23,0	28,0	33,0	38,0	48,5	1,4
	1600	26,5	32,0	38,0	43,5	55,0	1,4
	2000	35,0	42,0	49,0	56,0	70,0	1,7

Note: The weights provided apply to outlets without control equipment. For versions including control equipment, the weight of the control equipment has to be added.

4. Placement and installation

4.1. Round vents VPVM − K are intended for installation in free space, to be anchored to the floor. Wall−mounted vents VPVM − S and corner vents VPVM − R are installed onto walls and in corners, to be anchored either to the floor or to the wall (in the corner).

Fig. 4 Floor−mounting example

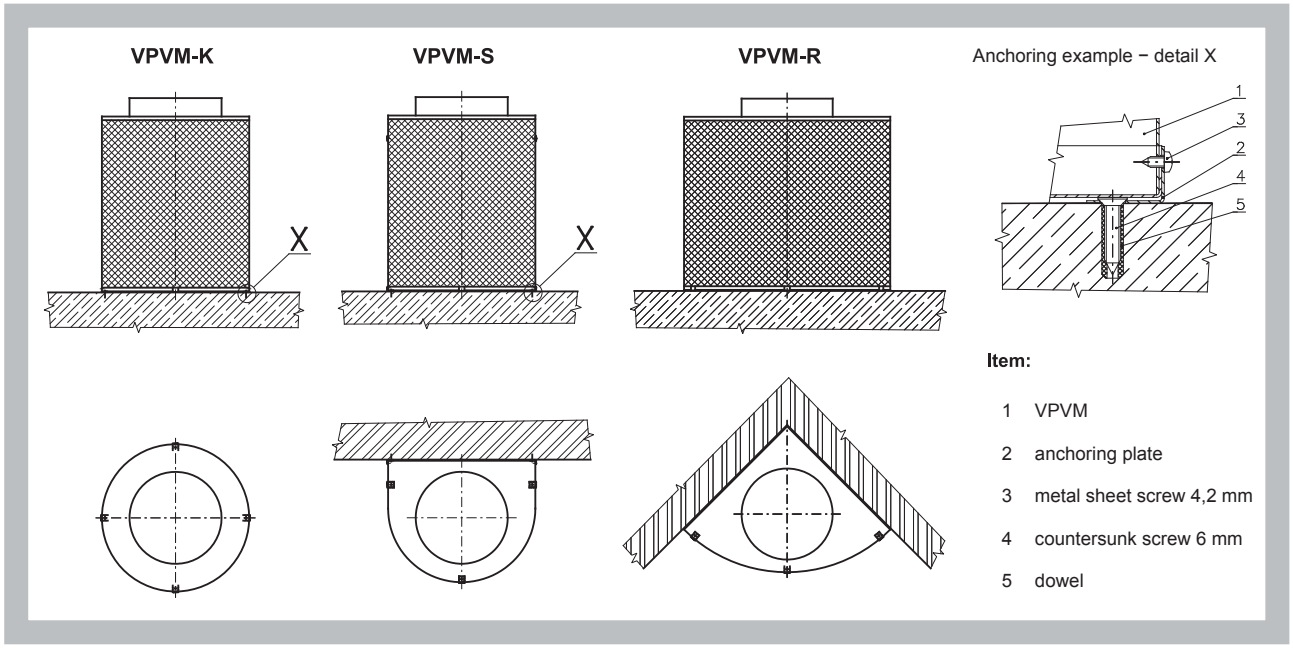

Large vent supply includes 6 anchoring plates (Pos. 2) and 6 metal−sheet screws, 4,2 mm (Pos. 3). Connecting material (Pos. 4 and 5) is not included in the supply.

III. TECHNICAL DATA

5. Basic parameters

5.1. Maximum air-flow through the vent

Tab. 5.1.1. Maximum air-flow through the vent $\dot{V}$ [m³.h⁻¹]

	Size	socket Ø D	Vent height H				
			750	1000	1250	1500	2000
VPVM-K	400	313	1250	1400	1500	1650	1800
	600	498	2400	2600	2900	3100	3300
	800	558	3100	3450	3600	3900	4200
	1000	628	3800	4230	4500	4800	5300
	1200	708	4700	5300	5500	6000	6500
	1480	798	6100	6660	7000	7660	8100
VPVM-S	400	248	660	730	770	830	900
	600	398	1400	1530	1700	1800	1900
	800	448	1800	2000	2100	2250	2450
	1000	498	2200	2430	2600	2800	3000
	1200	558	2750	3050	3200	3450	3700
	1500	628	3450	3800	4000	4300	4600
	2000	798	5150	5800	6000	6500	7000
VPVM-R	800	248	660	730	770	830	900
	1000	313	1150	1200	1400	1500	1600
	1200	398	1400	1530	1700	1750	1900
	1400	448	1600	1750	1800	2000	2150
	1600	448	1800	2000	2100	2250	2450
	2000	498	2200	2430	2600	2800	3000

5.2. Effective area

Tab. 5.2.1. Effective area

Effective area S_{ef} [m²]		
VPVM - K	π . D . H . K	K = 0,63
VPVM - S	0,5 .π. A . H . K	
VPVM - R	0,25 .π. A . H . K	

6. Calculation and determination quantities

Fig. 5

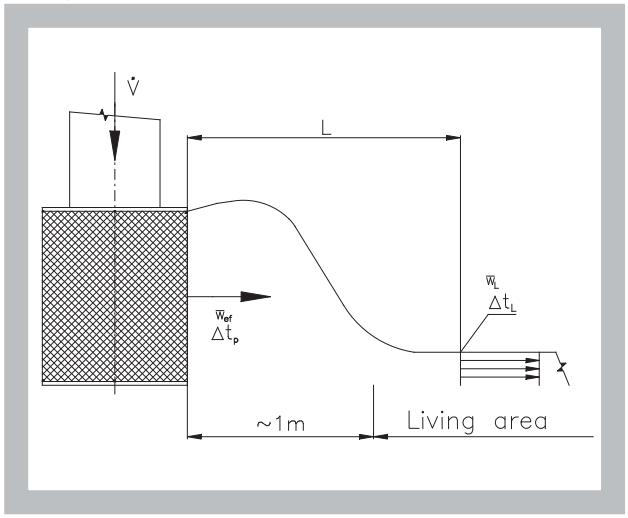

$\dot{V}$	[m³/h]	volumetric airflow rate for one vent
Δp_c	[Pa]	total pressure loss at ρ= 1,2 kg.m³
w_{ef}	[m.s⁻¹]	effective velocity
L_{WA}	[dB(A)]	acoustic power level
S_{ef}	[m²]	effective area
L	[m]	length of flow
$\overline{w}_L$	[m.s⁻¹]	flow velocity in L distance from vent
Δt_p	[K]	difference between inlet air temperature and room air temperature
Δt_L	[K]	difference between room air temperature and flow air temperature in L distance

6.1. Pressure losses and acoustic powers

Tab. 6.1.1. Correction to vent height (applicable to diagrams 6.1.1. to 6.1.3.)

	Vent height H				
	750	**1000**	**1250**	**1500**	**2000**
Δp_c	x 1,1	x 1	x 0,9	x 0,8	x 0,8
L_{WA}	+ 1	0	- 1	- 1	- 2

Chart 6.1.1. VPVM - K

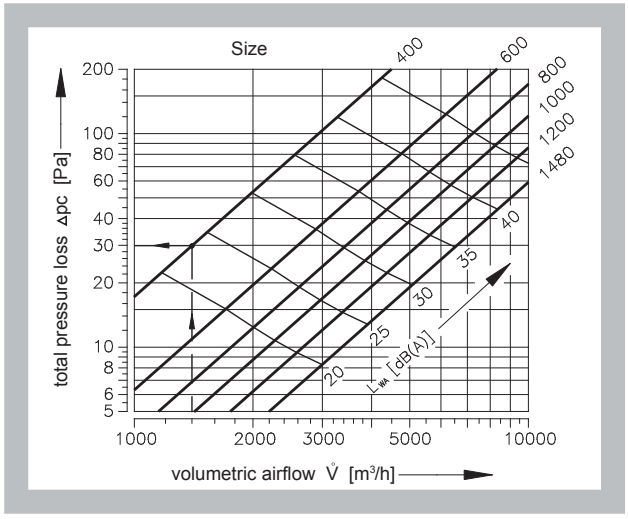

Chart 6.1.2. VPVM - S

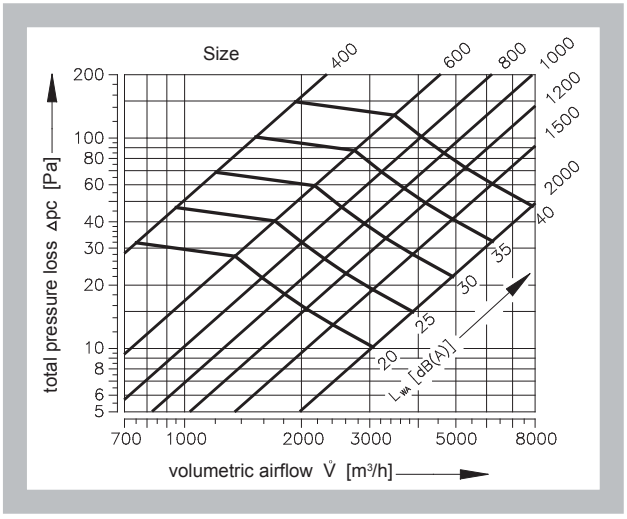

Chart 6.1.3. VPVM - R

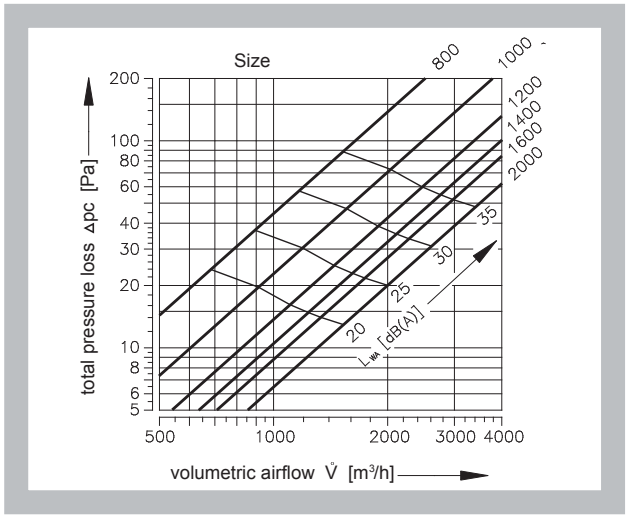

6.2. Flow velocity and temperature coefficient

Tab. 6.2.1. Correction to vent height (applicable to diagrams 6.2.1. to 6.2.19.)

	Vent height H				
	750	**1000**	**1250**	**1500**	**2000**
V_L	x 0,95	x 1	x 1,05	x 1,1	x 1,15
$\Delta t_L/\Delta t_p$	x 0,65	x 0,7	x 0,75	x 0,8	x 0,9

Chart 6.2.1. VPVM - K 400

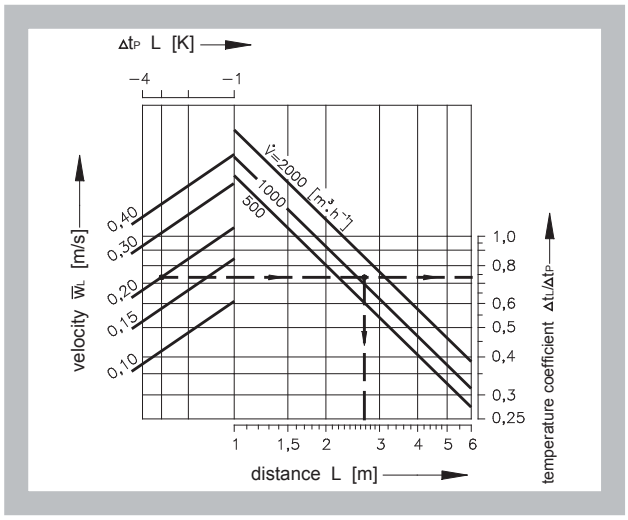

Chart 6.2.2. VPVM - K 600

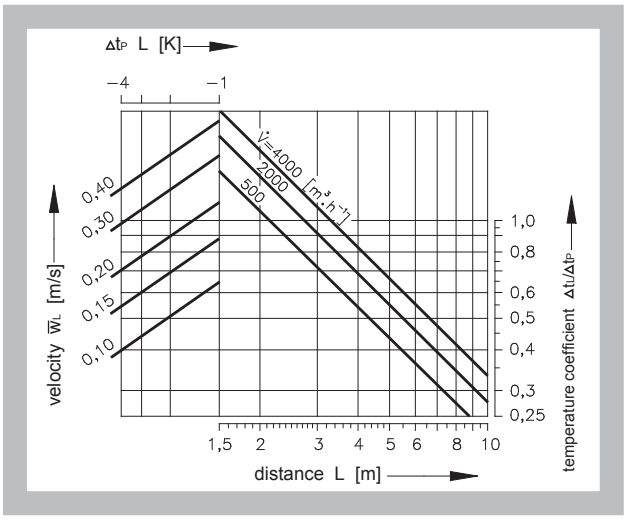

Chart 6.2.3. VPVM - K 800

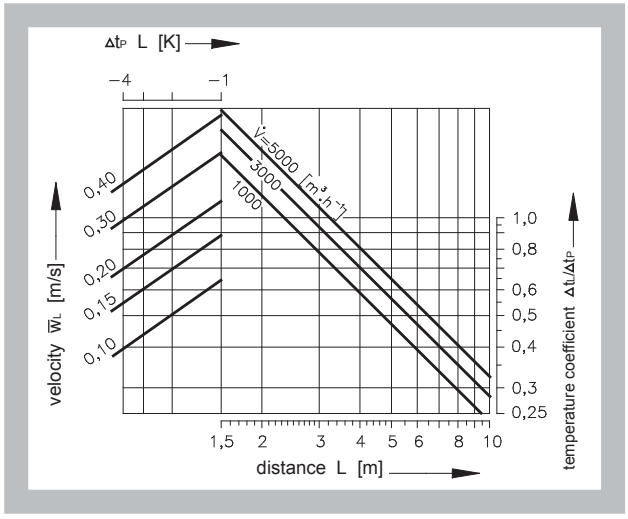

Chart 6.2.4. VPVM - K 1000

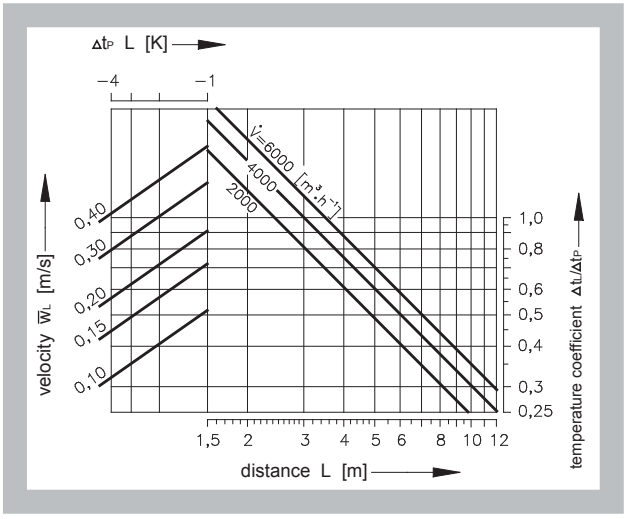

Chart 6.2.5. VPVM - K 1200

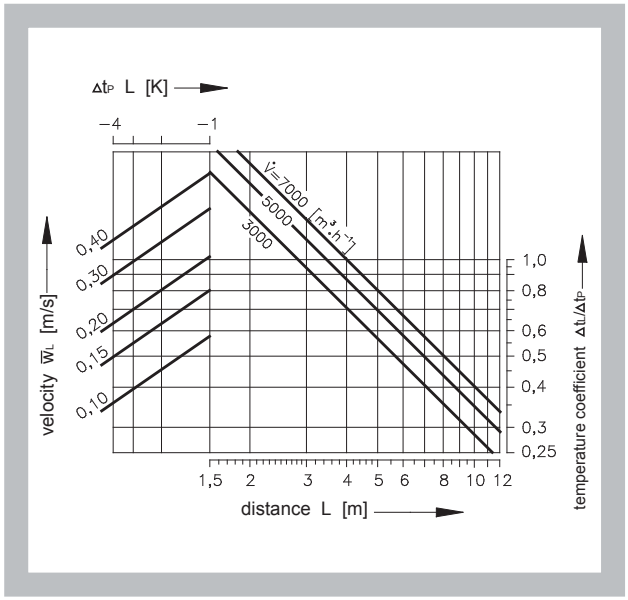

Chart 6.2.6. VPVM - K 1480

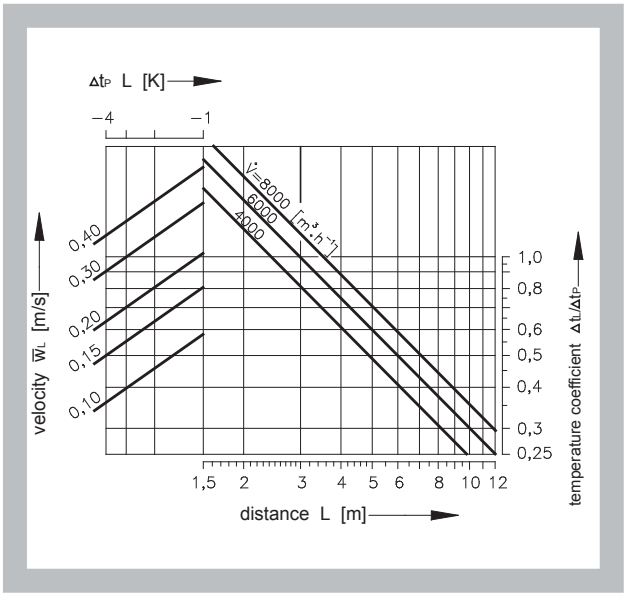

Chart 6.2.7. VPVM - S 400

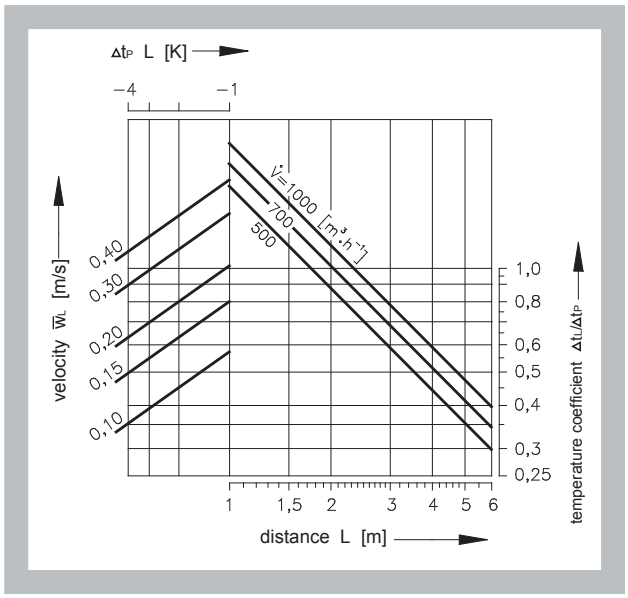

Chart 6.2.8. VPVM - S 600

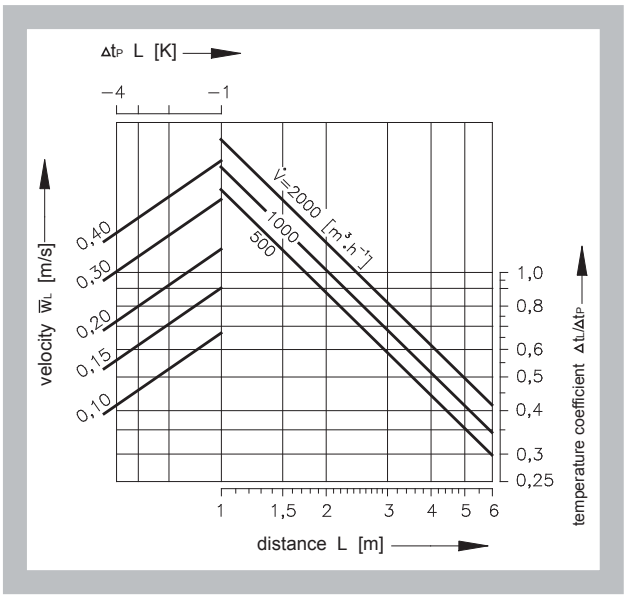

Chart 6.2.9. VPVM - S 800

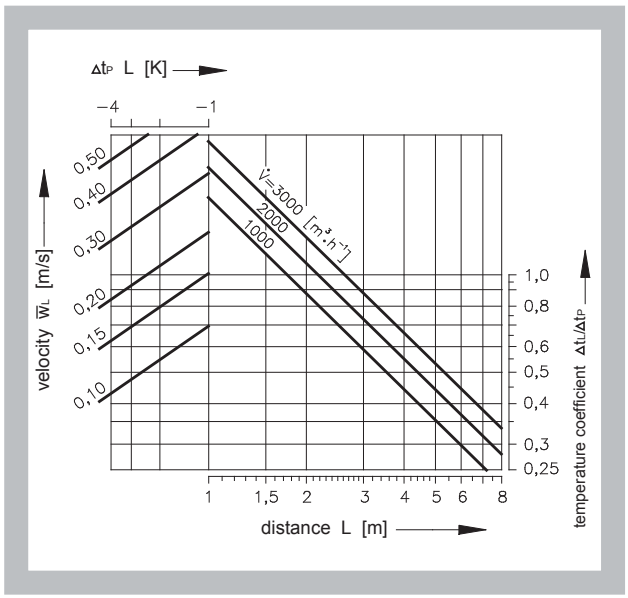

Chart 6.2.10. VPVM - S 1000

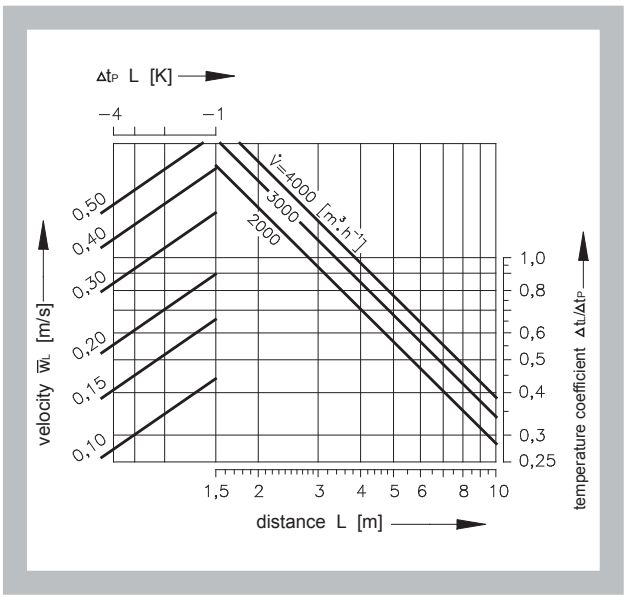

Chart 6.2.11. VPVM - S 1200

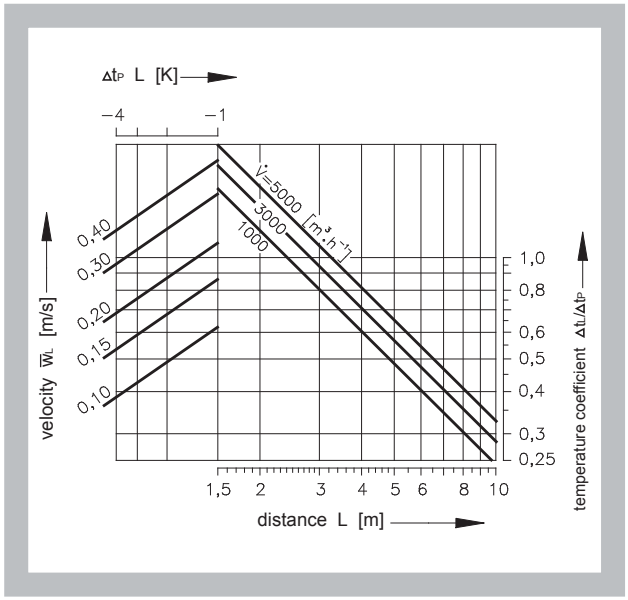

Chart 6.2.12. VPVM - S 1500

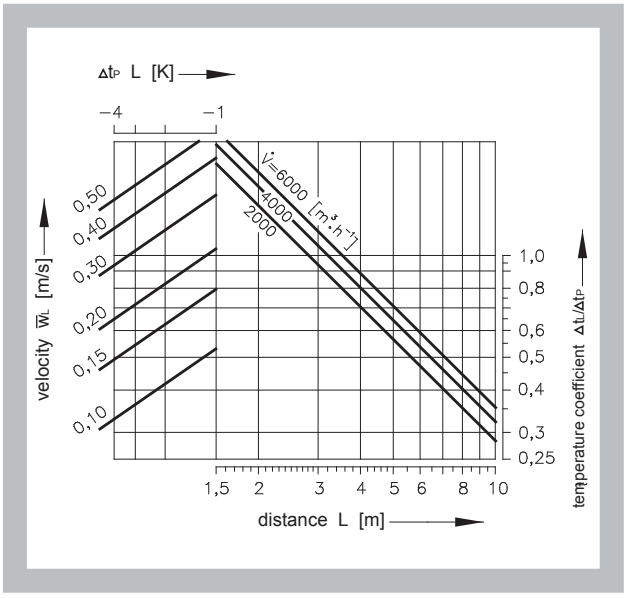

Chart 6.2.13. VPVM - S 2000

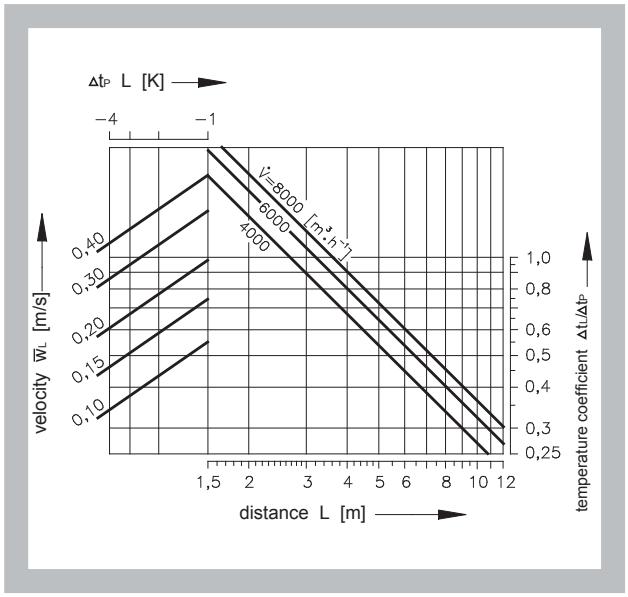

Chart 6.2.14. VPVM - R 800

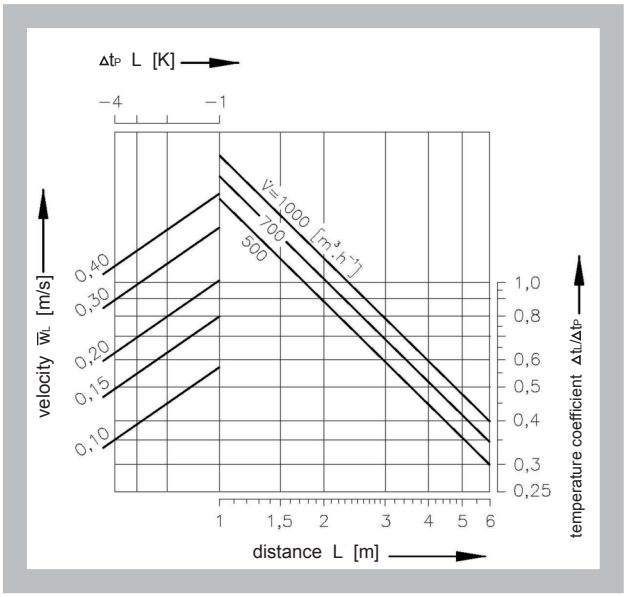

Chart 6.2.15. VPVM - R 1000

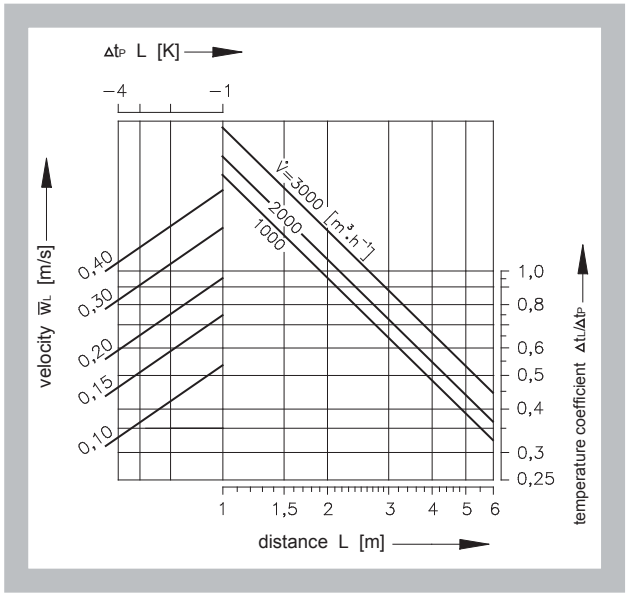

Chart 6.2.16. VPVM - R 1200

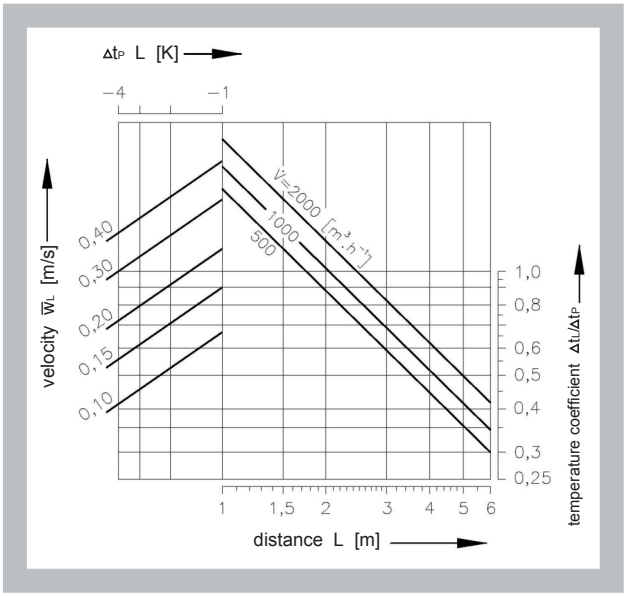

Chart 6.2.17. VPVM - R 1400

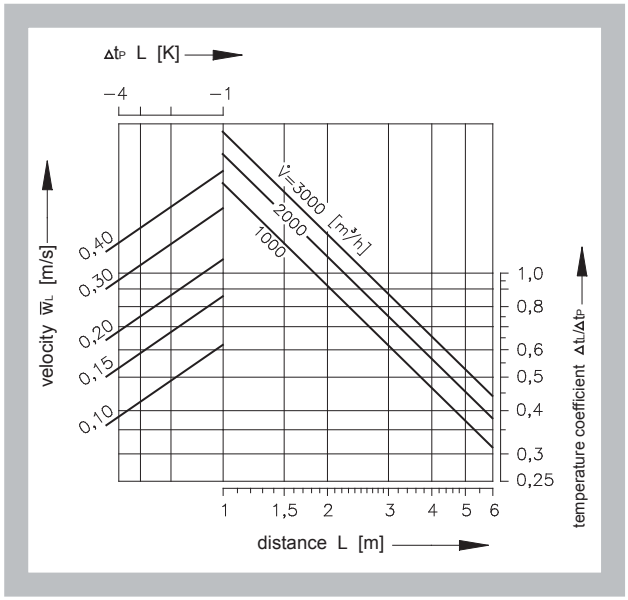

Chart 6.2.18. VPVM - R 1600

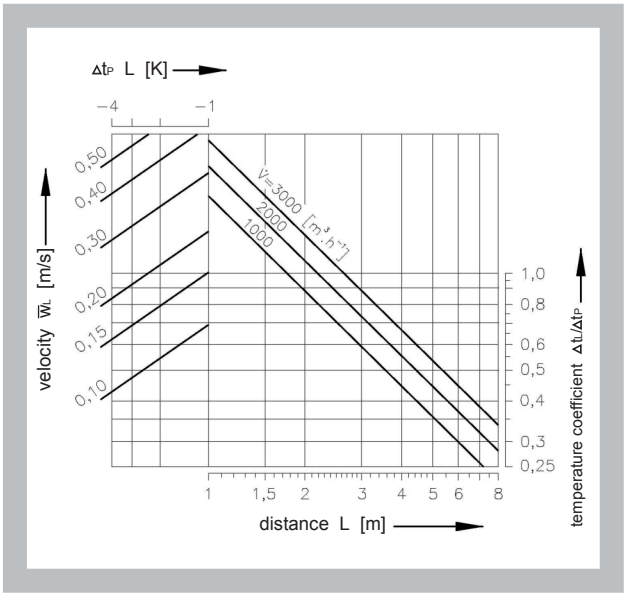

Chart 6.2.19. VPVM - R 2000

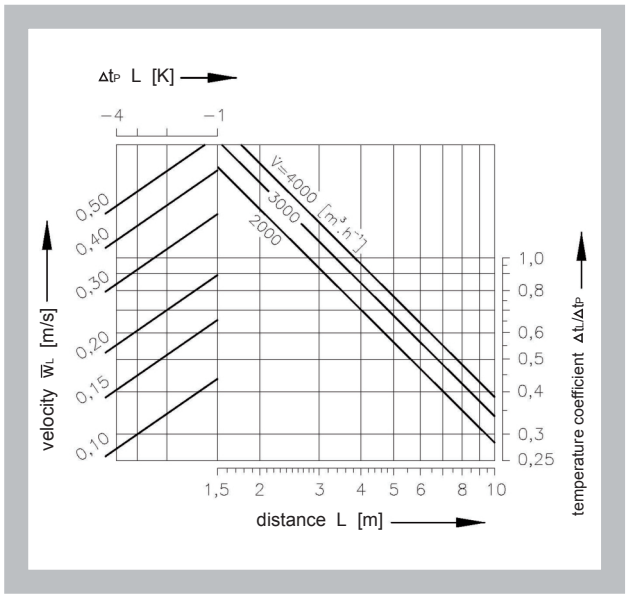

Fig. 6 Example

Data input:	Vent VPVM - K
	$\mathring{V}$ = 1400 m³.h⁻¹
	H = 1000 mm
	Δt_p = -3 K
	$\overline{w}_L$ = 0,2 m.s⁻¹
Preliminary design Tab. 5.1.1.	size 400
Chart 6.1.1. :	Δp_c = 30 Pa
	L_{WA} = 23 dB(A)
Chart 6.2.1. :	L = 2,7 m
	$\Delta t_L/\Delta t_P$ = 0,72
Correction to outlet height	$\Delta t_L/\Delta t_P$ = 0,5

IV. ORDERING DATA

7. Ordering key

VPVM - K 400x1000 R TPM 013/01

- TPM 013/01 – technical conditions
- R – with control flap
  - without control flap
- 400x1000 – height
- 400x1000 – size
- K – round
- S – wall−mounted (180°)
- R – corner (90°)
- VPVM - K – type

V. MATERIAL, FINISHING

8. Material

8.1. Vent parts are made of steel sheet. The surface is finished with white baking varnish of RAL 9010 colour shade. Other shade requirements have to be agreed with the manufacturer in advance.

VI. PACKING, TRANSPORT, STORAGE

9. Logistical data

9.1. Vents are supplied in crates, covered with shrinkable foil, by covered transportation means. When handled during transport and storage, vents must be protected against mechanical damage.

9.2. Provided no method of acceptance is determined in the order, vents will be considered accepted when being handed over to the carrier.

9.3. Vents must be stored in covered rooms, in environments free from aggressive vapours, gases and dust. Temperature range of −5 to +40 °C and relative humidity up to 80% must be kept in the storage rooms.

HELLA

Linear Slot Diffuser

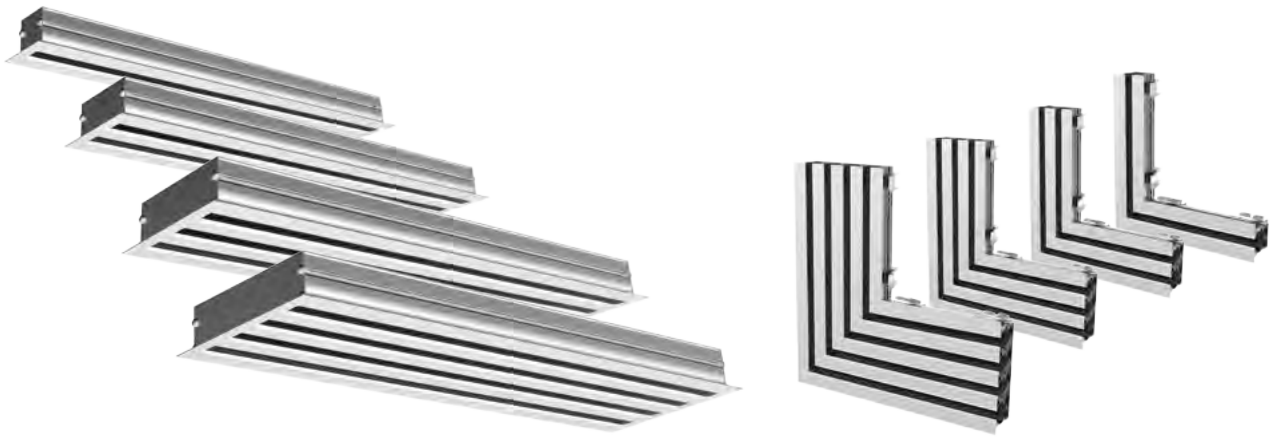

Table of Content

Description 2
Design 3
Dimensions 4
Ordering Codes 6
Accessories 8
Technical Parameters 13
Installation, Maintenance & Operation 20
Transport & Storage 20
Supplement 20
Related Products 21

Description

HELLA is a linear slot diffuser, mainly intended for air supply in comfort ventilation systems for offices, shops, medical rooms, school classrooms etc.
The supply air flow pattern/direction can be formed by adjustable deflectors in vents, air flow volume can be tuned by slider adjustment damper. Air extract is also possible with HELLA.
Typical installation location for HELLA is suspended ceiling. The diffusers can be installed as individual pieces or in array of multiple segments.

Highlights

- Modern slim and compact design
- Easy and quick installation
- Precise adjustment of air discharge pattern
- Installation with or without plenum box
- Plenum box with tightness class C, compliant with EN 1751 standard
- Slider adjustment damper available
- Individual diffuser or continuous array of multiple diffusers installable
- 1-, 2-, 3- or 4-slot arrangement
- Rectangular corner elements available

Product Types

- HELLA: Linear diffuser
- HELLA-T: Linear diffuser for T-bar ceiling installation
- HELLA-CE: 90° corner element

Information about accessories for HELLA is available from page 8

- PB-HELLA: Plenum box
- MB-HELLA: Mounting bridge
- CP-HELLA: Connection piece
- EC-HELLA: End-cap

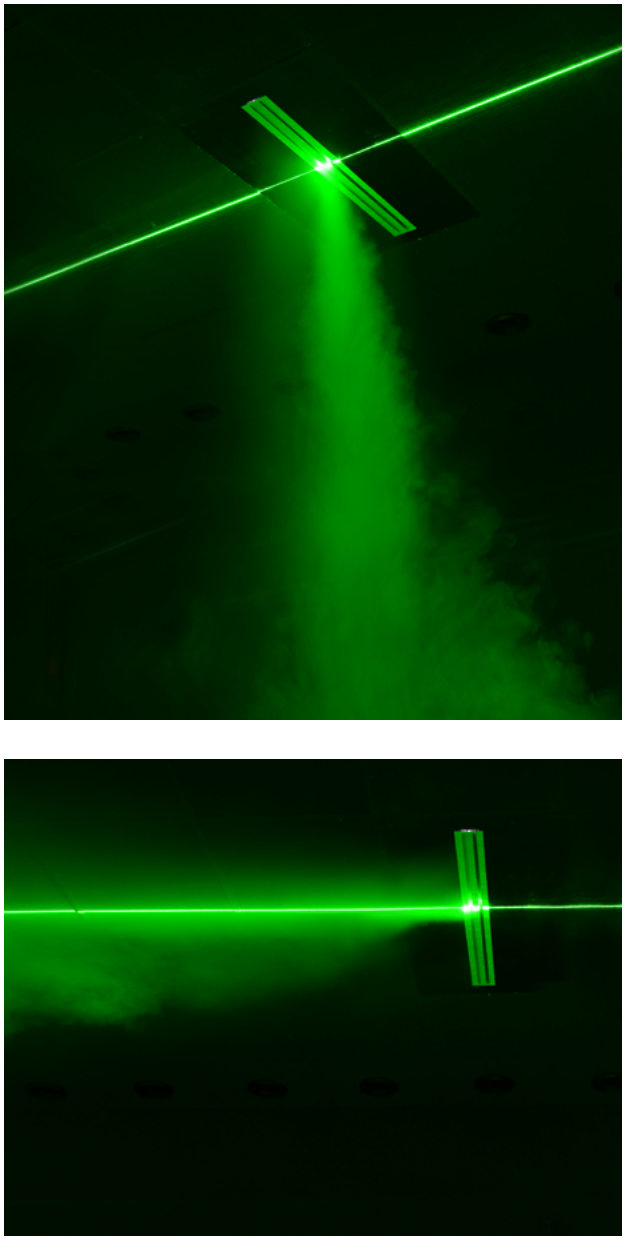

Fig. 1: Air flow visualisation

Design

Linear slot diffuser HELLA is manufactured from aluminium profiles. The surface treatment can be anodized aluminium or powder paint.
The number of slots can be 1 up to 4.
Each individual slot is equipped by longitudinal deflector, which can be adjusted for different air flow patterns in 180° angle between the vertical and two opposed horizontal directions.
These deflectors as well as the profiles dividing the slots are dismountable without tools, making so the installation of the diffuser easy. The galvanized steel slider adjustment damper as a part of the diffuser can be attached or detached without tools. The end caps (frame profiles on short sides of the diffuser) are fixed by screws. If the end caps are dismounted, it is possible to install a continuous array of multiple diffusers. Galvanized steel plenum box with circular duct connection can be delivered as accessory of the diffuser optionally with insulation inside/outside. For installation without plenum box a galvanized steel mounting bridge is available.

Product Parts & Setup Possibilities

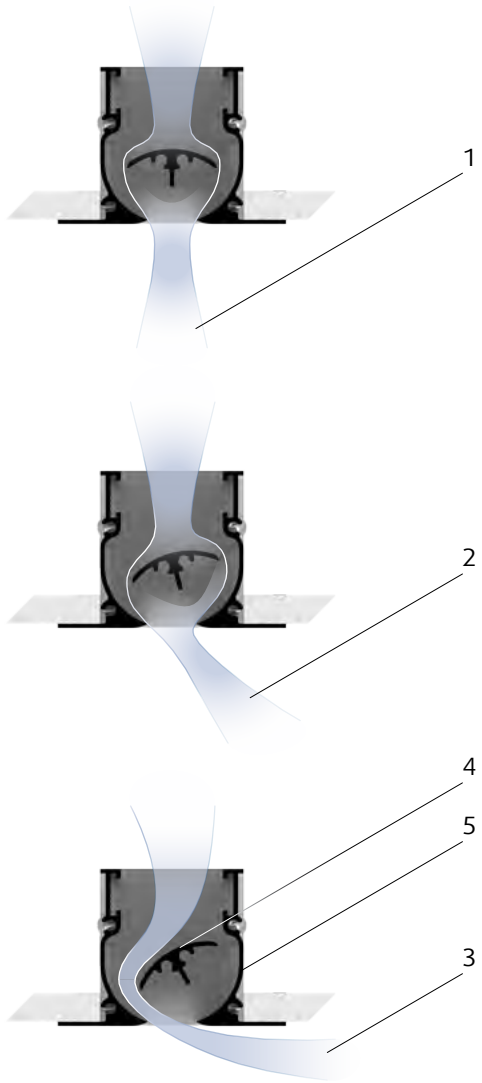

Fig. 2: Different deflectors setup and resulting air flow patterns

Legend

1	Vertical distribution; position 1
2	Diagonal distribution; positions 2
3	Horizontal distribution; positions 3
4	Deflector
5	Diffuser

Dimensions

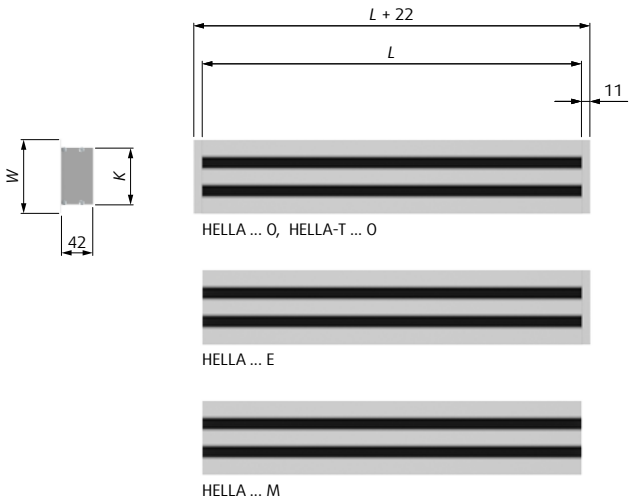

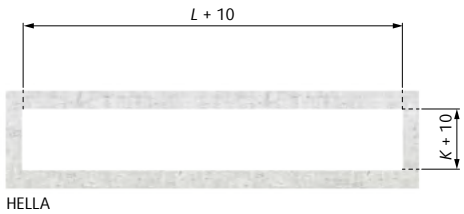

Fig. 4: Dimensions of the HELLA installation cutout

Fig. 3: Dimensions of HELLA and HELLA-T

Tab. 1: Dimensions and weights of the HELLA

L	HELLA-1			HELLA-2			HELLA-3			HELLA-4		
	W	*K*	*m*	*W*	*K*	*m*	*W*	*K*	*m*	*W*	*K*	*m*
(mm)			(kg)	(mm)		(kg)	(mm)		(kg)	(mm)		(kg)
500			0,7			1,0			1,4			1,8
600			0,8			1,2			1,6			2,1
700			0,9			1,4			1,9			2,4
800			1,0			1,6			2,2			2,7
900			1,1			1,7			2,4			3,0
1000	60	41	1,2	97	77	1,9	134	114	2,6	171	151	3,3
1100			1,3			2,1			2,9			3,6
1200			1,4			2,3			3,1			3,9
1300			1,5			2,5			3,4			4,2
1400			1,6			2,7			3,6			4,6
1500			1,8			2,8			3,8			4,8

Tab. 2: Dimensions and weights of the HELLA-T

L_t	*L*	HELLA-T-1			HELLA-T-2			HELLA-T-3			HELLA-T-4		
		W	*K*	*m*	*W*	*K*	*m*	*W*	*K*	*m*	*W*	*K*	*m*
(mm)				(kg)	(mm)		(kg)	(mm)		(kg)	(mm)		(kg)
600	573			0,7			1,2			1,6			2,0
1200	1173	60	41	1,3	97	77	2,2	134	114	3,0	171	151	3,8
1800	1773			2,2			3,5			4,7			6,0
2400	2373			2,8			4,6			6,2			7,8

NOTE: L_t is a nominal length.

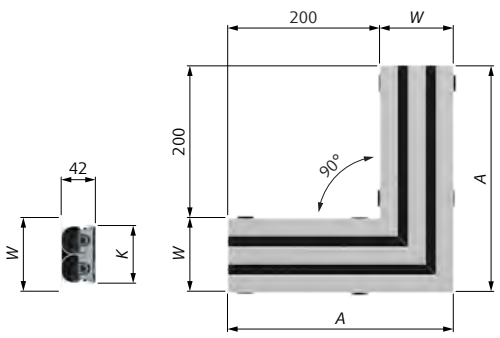

Fig. 5: Dimensions of the HELLA-CE

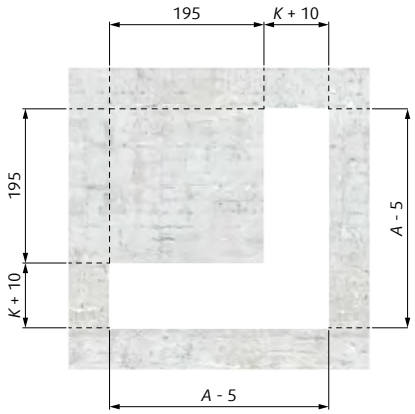

Fig. 6: Dimensions of the HELLA-CE installation cutout

Tab. 3: Dimensions and weights of the HELLA-CE

HELLA-CE-1				HELLA-CE-2				HELLA-CE-3				HELLA-CE-4			
A	*W*	*K*	*m*	*A*	*W*	*K*	*m*	*A*	*W*	*K*	*m*	*A*	*W*	*K*	*m*
(mm)			(kg)	(mm)			(kg)	(mm)			(kg)	(mm)			(kg)
260	60	41	0,8	297	97	77	1,2	334	134	114	1,7	371	171	151	2,3

Ordering Codes

HELLA

Linear Diffuser

HELLA - □-□-□-□-□-□

Number of slots		1 ... 4
Diffuser length *L* (mm) [1]	Increment 100 mm	500 ... 1500
Deflector colour	Black	B
	White (extra charge)	W
Damper	Slider adjustment damper	R
	No damper	0
Diffuser construction	Complete unit including end caps at both ends [2]	0
	End unit for linear assembly	E
	Middle unit for linear assembly	M
Surface finish	Anodized aluminium finish	AN
	Powder coating - white, 30% gloss	W
	Powder coating - other RAL colours	RALxxxx

NOTES:

1) Standard sizes for non-specific installation.
L represents the length of the diffuser part immersed in the ceiling.

2) End cap is the detouchable short side of the frame on HELLA diffuser (see page 16).

Example of the Ordering Code

HELLA-2-1500-B-0-0-AN

Diffuser with 2 slots, 1500 mm length, black deflectors, without damper, complete unit including side frame at both ends, anodized aluminium finish.

HELLA-T

Linear Diffuser for T-bar Ceiling Installation

HELLA-T - □-□-□-□-□

Number of slots		1 ... 4
Nominal length L_t (mm) [1]		600 1200 1800 2400
Deflector colour	Black White (extra charge)	B W
Damper	Slider adjustment damper No damper	R 0
Surface finish	Anodized aluminium finish Powder coating - white, 30% gloss Powder coating - other RAL colours	AN W RALxxxx

NOTES:

1) Sizes for installation in T-bar ceiling, raster 600 mm.
L_t represents the length of the diffuser outer frame laid on the ceiling T-profiles.

Example of the Ordering Code

HELLA-T-2-1200-B-0-AN

Diffuser for T-bar raster 600 mm, with 2 slots, length of diffuser 1200 mm, black deflectors, without damper, anodized aluminium finish.

HELLA-CE

90° Corner Element

HELLA-CE - □-□-□

Number of slots		1 ... 4
Deflector colour	Black White (extra charge)	B W
Surface finish	Anodized aluminium finish Powder coating - white, 30% gloss Powder coating - other RAL colours	AN W RALxxxx

NOTES:

HELLA-CE is a corner element with only visual function. It cannot be used for air distribution.

HELLA-CE is delivered with 4 pieces of mounting bridges MB-HELLA in corresponding size.

Example of the Ordering Code

HELLA-CE-3-B-AN

Corner element, with 3 slots, black deflectors, anodized aluminium finish.

Accessories

PB-HELLA & PB-HELLA-T

Plenum Boxes

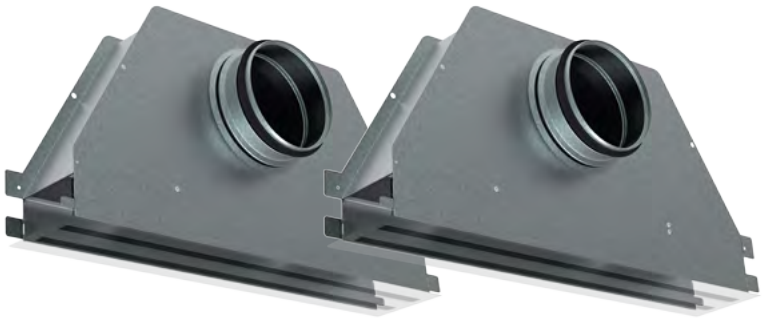

Description

Plenum boxes PB-HELLA and PB-HELLA-T are used to achieve proper discharge parameters of diffusers HELLA and HELLA-T, corresponding in size and number of slots.

Design

PB-HELLA and PB-HELLA-T is made from galvanized steel sheet, equipped by circular duct connections with rubber gasket. The box can have isolation inside and outside. Tightness class of the plenum box is “C” in compliance with EN 1751 standard.

Multiple boxes can be installed with multiple diffusers arranged in an array. For this type of installation the boxes have connecting ears to join with neighbouring box.

For diffusers HELLA-T of length 1800 mm and 2400 mm the plenum boxes PB-HELLA-T with corresponding length consist from two connected plenum box segments with two separate air inlets (see dimension table PB-HELLA-T).

Dimensions

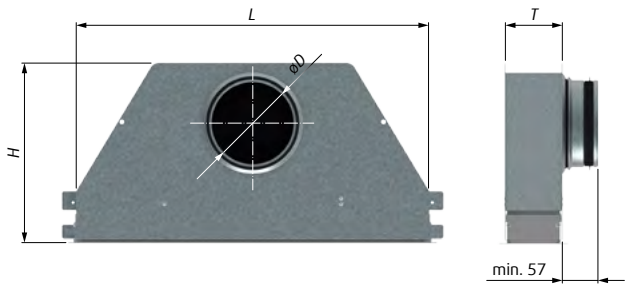

Fig. 7: Dimensions of the PB-HELLA and PB-HELLA-T

Tab. 5: Dimensions of the PB-HELLA

		PB-HELLA-1										
L	(mm)	500	600	700	800	900	1000	1100	1200	1300	1400	1500
H		214										
T		44										
øD		100					125					
m	(kg)	1,3	1,5	1,7	1,9	2,1	2,3	2,5	2,8	3,0	3,2	3,4

		PB-HELLA-3										
L	(mm)	500	600	700	800	900	1000	1100	1200	1300	1400	1500
H		282										
T		118										
øD		160					200					
m	(kg)	1,9	2,2	2,4	2,7	2,9	3,3	3,5	3,8	4,1	4,3	4,6

		PB-HELLA-2										
L	(mm)	500	600	700	800	900	1000	1100	1200	1300	1400	1500
H		250										
T		81										
øD		125					160					
m	(kg)	1,6	1,8	2,0	2,3	2,5	2,8	3,0	3,3	3,5	3,7	4,0

		PB-HELLA-4										
L	(mm)	500	600	700	800	900	1000	1100	1200	1300	1400	1500
H		337										
T		155										
øD		200					250					
m	(kg)	2,4	2,7	2,9	3,2	3,5	3,9	4,2	4,5	4,8	5,1	5,4

NOTE: The external isolation J (see the Ordering code on previous page) increases the dimension *T* by approximately 2 × 6 mm.

Tab. 4: Dimensions of the PB-HELLA-T

		PB-HELLA-T-1				PB-HELLA-T-2				PB-HELLA-T-3				PB-HELLA-T-4			
L_t	(mm)	600	1200	1800	2400	600	1200	1800	2400	600	1200	1800	2400	600	1200	1800	2400
n		1		2		1		2		1		2		1		2	
L	(mm)	573	1173	1773	2373	573	1173	1773	2373	573	1173	1773	2373	573	1173	1773	2373
H		214				250				282				337			
T		44				81				118				155			
øD		100				125				160				200			
m	(kg)	1,5	2,8	4,2	5,6	1,6	3,3	5	6,6	1,9	3,8	5,8	7,6	2,4	4,5	7	9

NOTES:

L_t = Nominal length of diffuser HELLA-T

n = Number of plenum box segments

L, H, T = Physical dimensions of plenum box PB-HELLA-T. See the Dimensions picture on previous page.

The external isolation J (see the Ordering code on page 13) increases the dimension *T* by approximately 2 × 6 mm.

For sizes 1800 and 2400 *L* is overall length of both plenum box segments together.

The weight *m* (kg) is stated for the whole plenum box set regardless if it consists of one or two plenum box segments.

Ordering Codes

PB-HELLA

Plenum Box for HELLA Diffuser

PB-HELLA - □-□-□

Number of slots on diffuset		1 ... 4
Length	Increment 100 mm	500 ... 1500
Isolation [1]	Internal isolation	I1
	External isolation	J

NOTES:

1) The external isolation J increases the dimension *T* (see the Dimensions picture on following page) by approximately 2 × 6 mm.
If no isolation is defined, the plenum box will come without isolation.

Plenum box PB-HELLA and mounting bridge MB-HELLA exclude each other in use with the same diffuser HELLA

Example of the Ordering Code

PB-HELLA-2-1000-I2

Plenum box for double slot diffuser HELLA,
1000 mm length, internal isolation.

PB-HELLA-T

Plenum Box for HELLA-T Diffuser

PB-HELLA-T - □-□-□

Number of slots on diffuset		1 ... 4
Length L_t [1]	Nominal length of plenum box	600
		1200
		1800
		2400
Isolation [2]	Internal isolation	I1
	External isolation	J

NOTES:

1) Plenum box PB-HELLA-T...-600 is intended for diffuser HELLA-T...-600

Plenum box PB-HELLA-T...-1200 is intended for diffuser HELLA-T...-1200

Plenum box PB-HELLA-T...-1800, composed from 2 segments, is intended for diffuser HELLA-T...-1800

Plenum box PB-HELLA-T...-2400, composed from 2 segments, is intended for diffuser HELLA-T...-2400

2) The external isolation J increases the dimension *T* (see the Dimensions picture on following page) by approximately 2 × 6 mm.
If no isolation is defined, the plenum box will come without isolation.

Plenum box PB-HELLA-T and mounting bridge MB-HELLA exclude each other in use with the same diffuser HELLA-T.

Example of the Ordering Code

PB-HELLA-T-2-1800

Plenum box for double slot diffuser HELLA-T,
1800 mm length, no isolation.
The plenum box consists from 2 segments.

MB-HELLA

Mounting Bridge

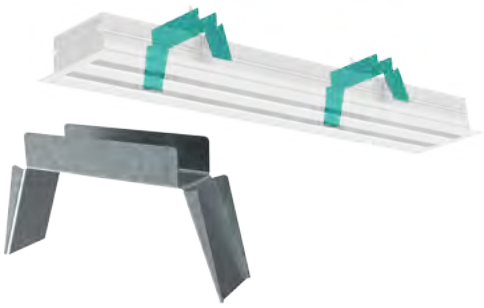

Description

The mounting bridge is used for installation of HELLA diffuser without plenum box in the suspended ceiling.

Design

MB-HELLA is made from galvanized steel.
It has a rivet nut to catch the fixing thread bolt of the diffuser.
For each number of slots on diffuser HELLA a different size of MB-HELLA is dedicated.
Each diffuser HELLA requires 2 pieces of MB-HELLA for installation.

Ordering Code

MB-HELLA - □

Number of slots on diffuser HELLA 1 ... 4

NOTE: Mounting bridge MB-HELLA and plenum box PB-HELLA exclude each other in use with the same diffuser HELLA.

Example of the Ordering Code

MB-HELLA-2

Mounting bridge for double slot diffuser HELLA-2.

CP-HELLA

Connection pin

Description

CP-HELLA is a connecting pin for joining neighbouring diffusers HELLA in an array.

Design

Circular profile pin from galvanized steel.
The pins are applied in the holes at the ends of the longitudinal frame profiles of the diffuser HELLA.

Other Specification

The quantity of CP-HELLA required to join multiple diffusers in an array: **p = 4 . (n - 1)**

p = required quantity of CP-HELLA pins
n = number of HELLA diffusers in the array

Ordering Code

CP-HELLA

EC-HELLA

End-cap

Description

The end caps on HELLA diffuser are part of the frame that covers the installation cut-out in ceiling when a single diffuser is installed. EC-HELLA shall be detached from diffuser when installed in array of multiple diffusers.

Design

EC-HELLA is made from aluminium profile with anodized or painted surface.
The end cap can be attached to the diffuser by screws, that are included in package of EC-HELLA.

Ordering Code

EC-HELLA - □-□

Number of slots on diffuset		1 ... 4
Surface finish [1]	Anodized aluminium finish	AN
	Powder coating - white, 30% gloss	W
	Powder coating - other RAL colours	RALxxxx

NOTES:
1) If no Surface finish is defined, white powder coating will be delivered.
EC-HELLA is delivered with 4 pieces of screws.

Example of the Ordering Code

EC-HELLA-2-AN

End-cap for double slot diffuser HELLA, anodized aluminium finish.

Technical Parameters

Legend

p_s	(Pa)	Pressure drop
q_v	(m^3/h) (l/s)	Air flow volume
L_{WA}	(dB)	A-weighted sound power level
ΔT	(K)	Temperature difference Supply air - Room air
$L_{0,2}$	(m)	Air throw length with terminal velocity 0,2 m/s
L_x	(m)	Air throw length calculated for specific terminal velocity
x	(m/s)	Terminal velocity in range of (0,1 ÷ 1) m/s
1, 2, 3, 4		Diagram line for diffuser with 1, 2, 3 or 4 slots

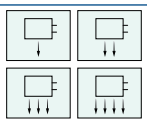	Vertical flow pattern
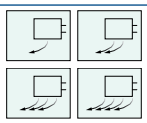	Horizontal flow pattern

Calculation of Air Throw for Different Terminal Velocities

$$L_x = L_{0,2} \cdot 0,2/x$$

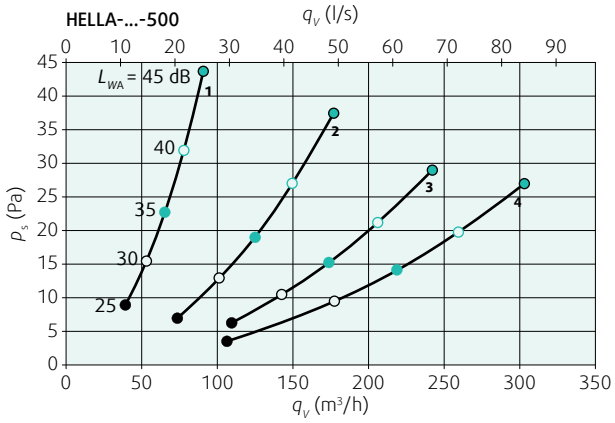

Diagram 1: Pressure drop & A-weighted sound power level; measured with PB-HELLA plenum box, without damper

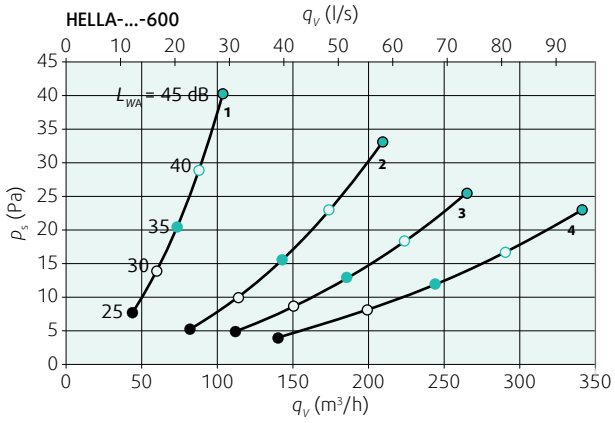

Diagram 2: Pressure drop & A-weighted sound power level; measured with PB-HELLA plenum box, without damper

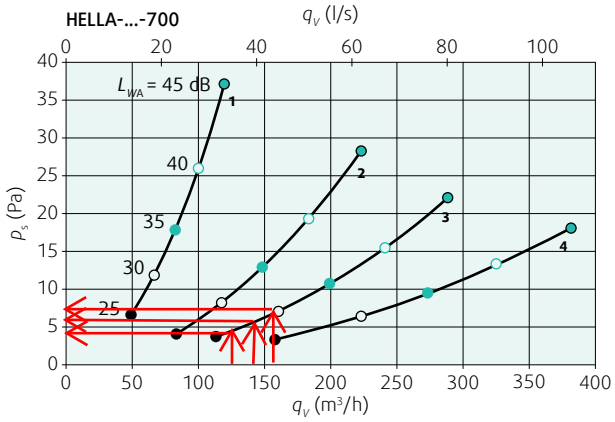

Diagram 3: Pressure drop & A-weighted sound power level; measured with PB-HELLA plenum box, without damper

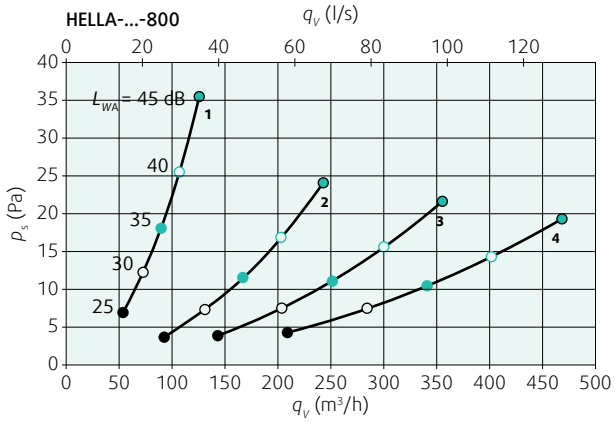

Diagram 4: Pressure drop & A-weighted sound power level; measured with PB-HELLA plenum box, without damper

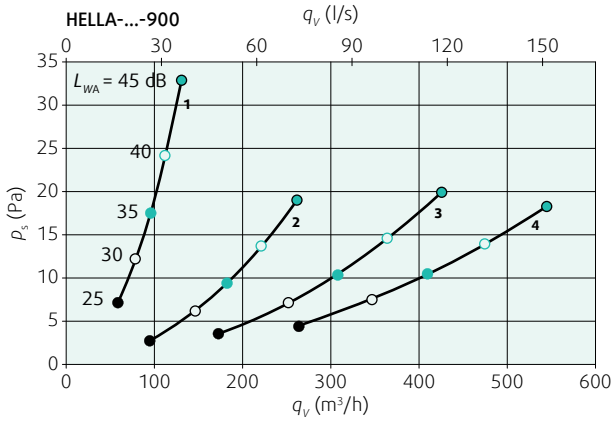

Diagram 5: Pressure drop & A-weighted sound power level; measured with PB-HELLA plenum box, without damper

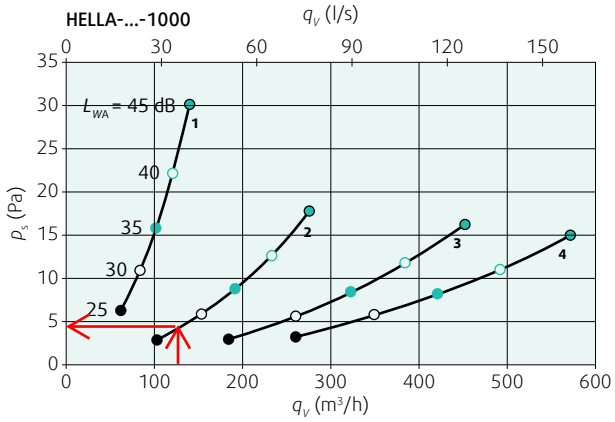

Diagram 6: Pressure drop & A-weighted sound power level; measured with PB-HELLA plenum box, without damper

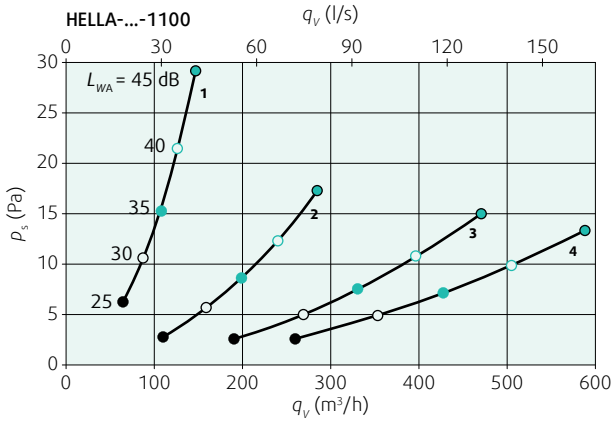

Diagram 7: Pressure drop & A-weighted sound power level; measured with PB-HELLA plenum box, without damper

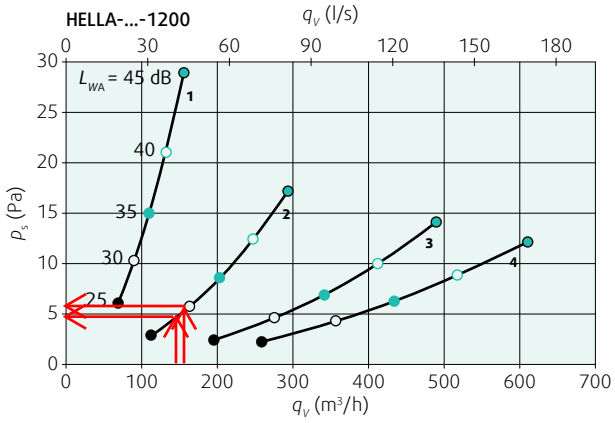

Diagram 8: Pressure drop & A-weighted sound power level; measured with PB-HELLA plenum box, without damper

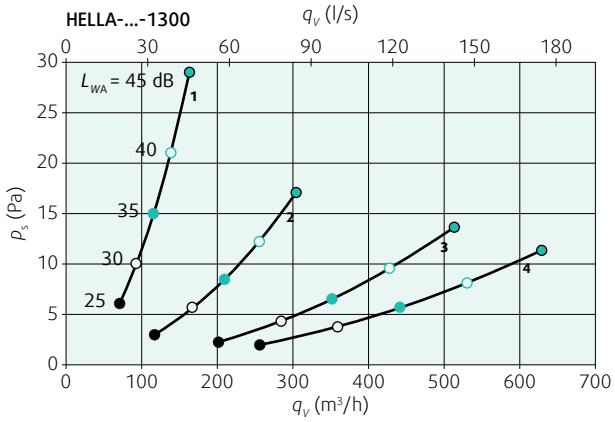

Diagram 9: Pressure drop & A-weighted sound power level; measured with PB-HELLA plenum box, without damper

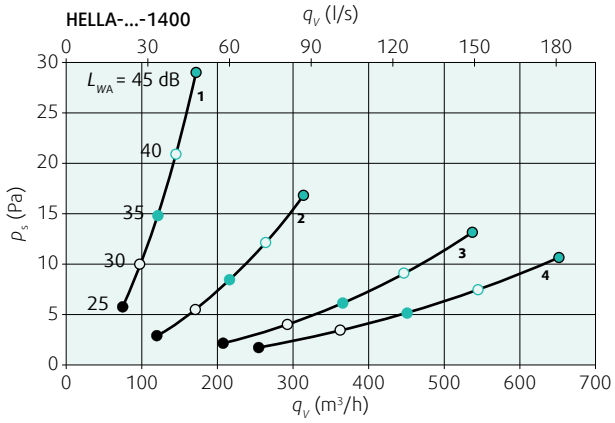

Diagram 10: Pressure drop & A-weighted sound power level; measured with PB-HELLA plenum box, without damper

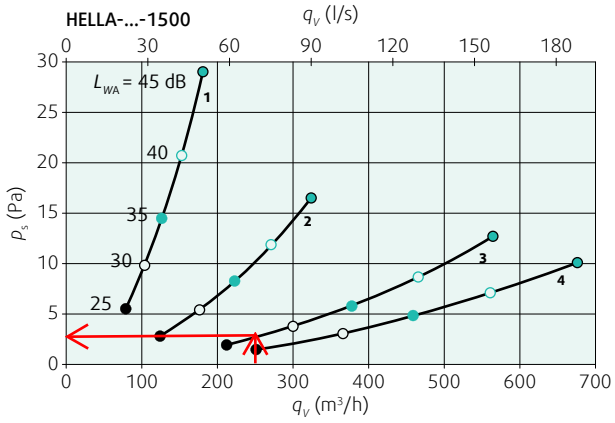

Diagram 11: Pressure drop & A-weighted sound power level; measured with PB-HELLA plenum box, without damper

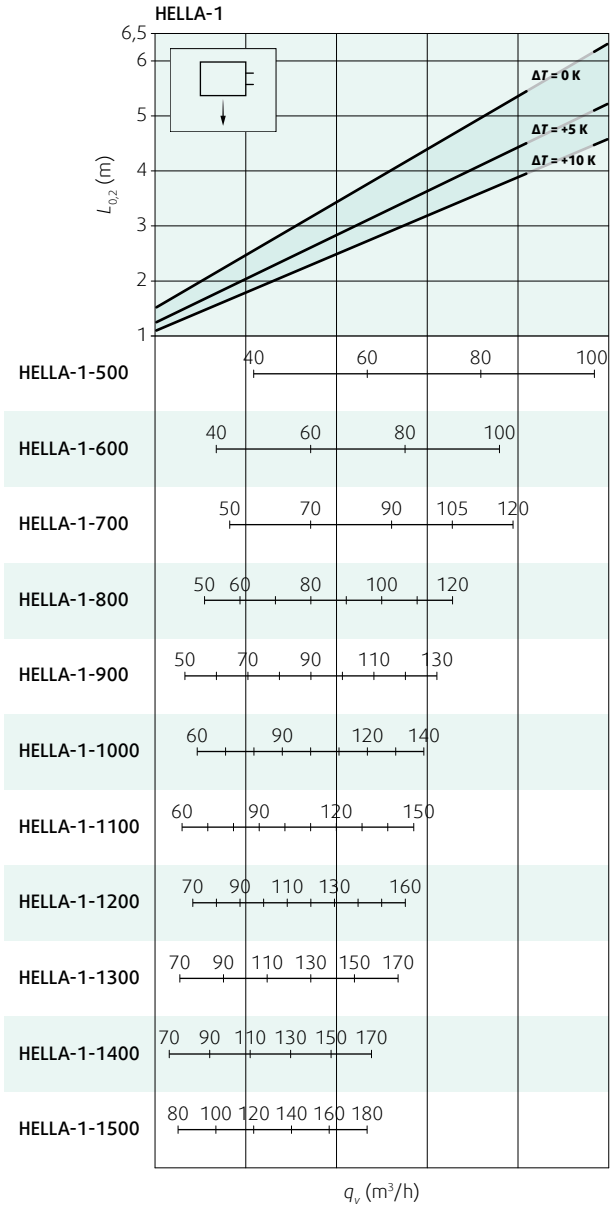

Diagram 12: Air throw length with terminal velocity 0,2 m/s (vertical flow pattern)

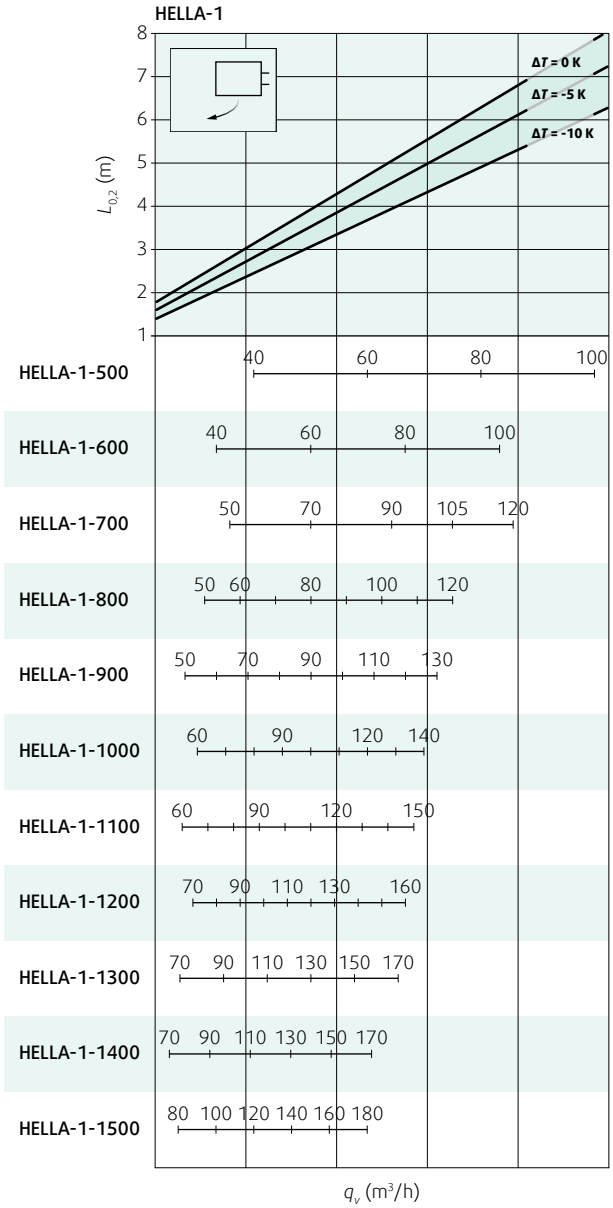

Diagram 13: Air throw length with terminal velocity 0,2 m/s (horizontal flow pattern)

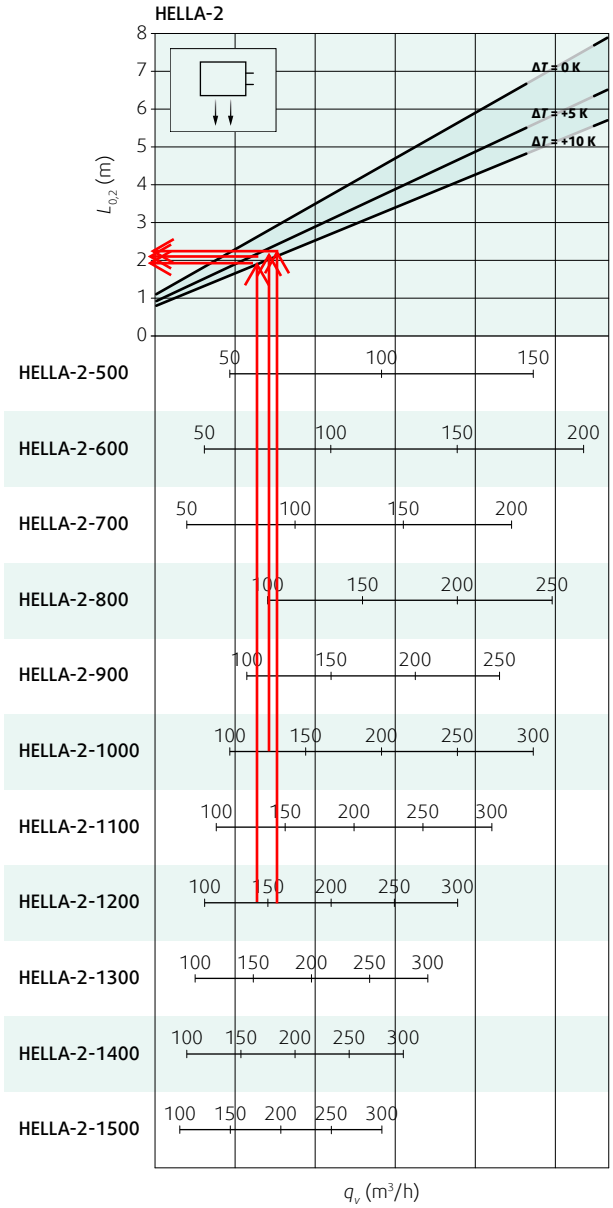

Diagram 14: Air throw length with terminal velocity 0,2 m/s (vertical flow pattern)

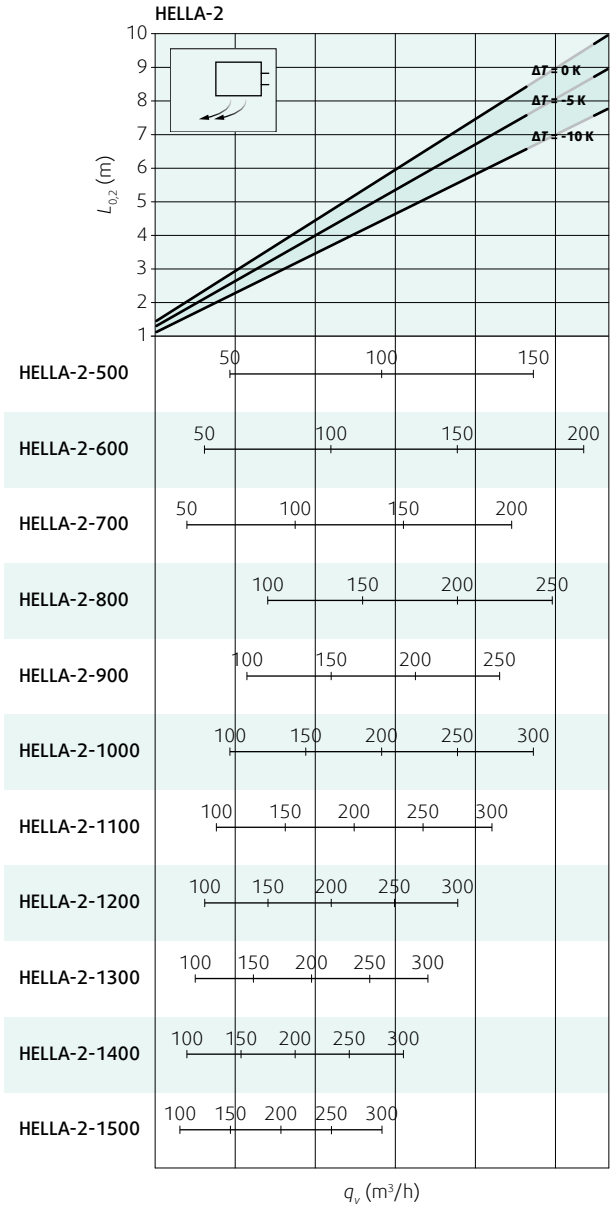

Diagram 15: Air throw length with terminal velocity 0,2 m/s (horizontal flow pattern)

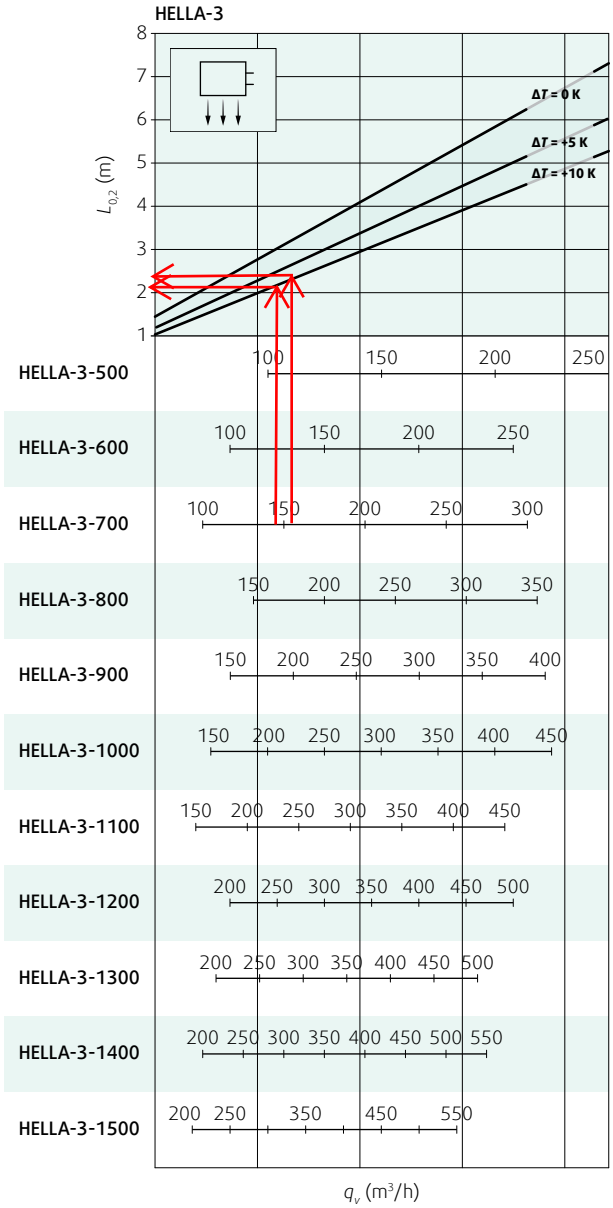

Diagram 16: Air throw length with terminal velocity 0,2 m/s (vertical flow pattern)

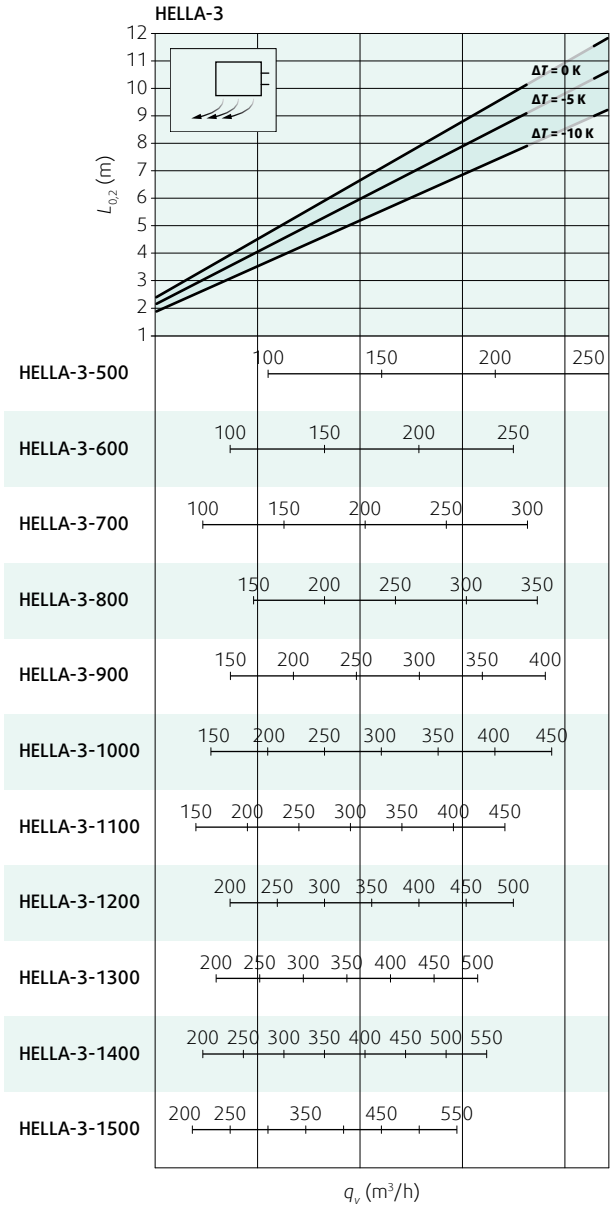

Diagram 17: Air throw length with terminal velocity 0,2 m/s (horizontal flow pattern)

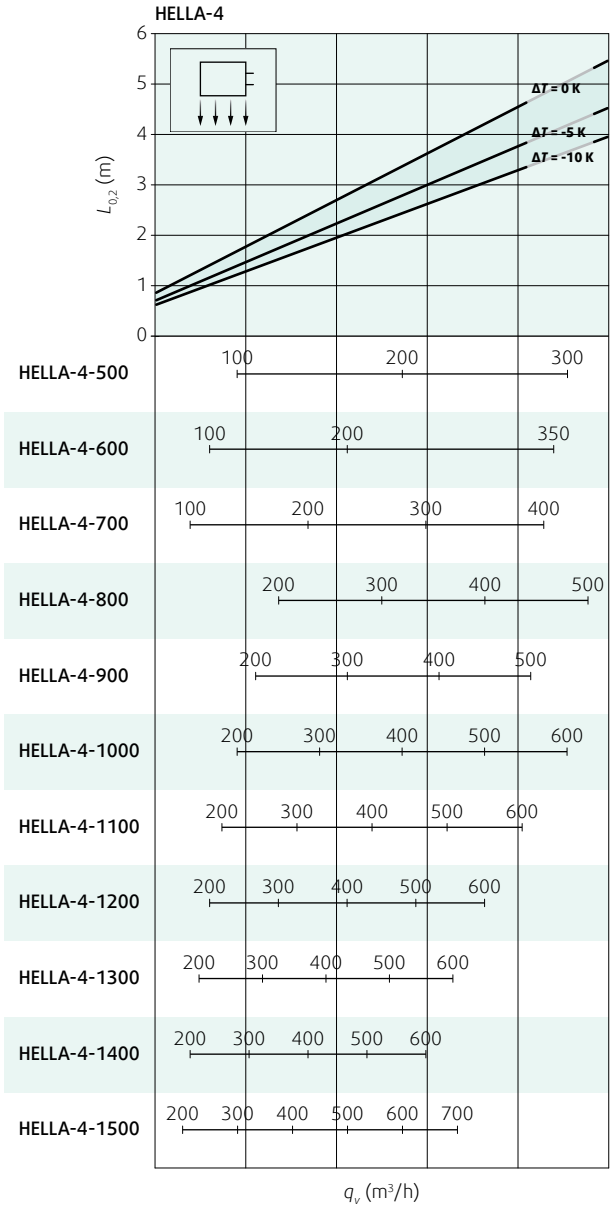

Diagram 18: Air throw length with terminal velocity 0,2 m/s (vertical flow pattern)

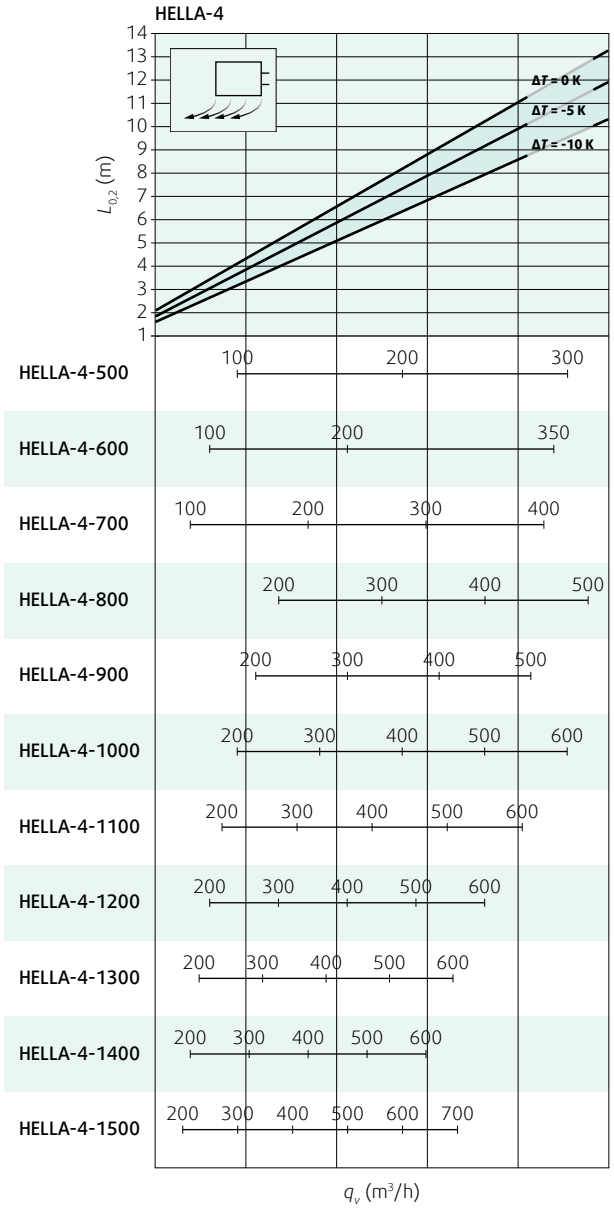

Diagram 19: Air throw length with terminal velocity 0,2 m/s (horizontal flow pattern)

Installation, Maintenance & Operation

Information about installation, maintenance and operation are available in the User Manual (document “UserManual_HELLA”).

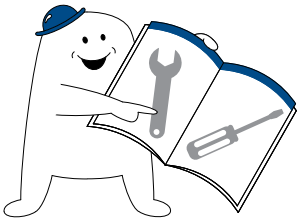

Transport & Storage

Dry indoor conditions with temperature range - 20 °C to + 40 °C.

Supplement

Any deviations from the technical specifications contained herein and the terms should be discussed with the manufacturer. We reserve the right to make any changes to the product without prior notice, provided that these changes do not affect the quality of the product and the required parameters. Current information on all products are available at www.systemair.com

Related Products

KSV

Slot Diffusers

Product information is available within the technical documentation TechSpec_TPI-54.

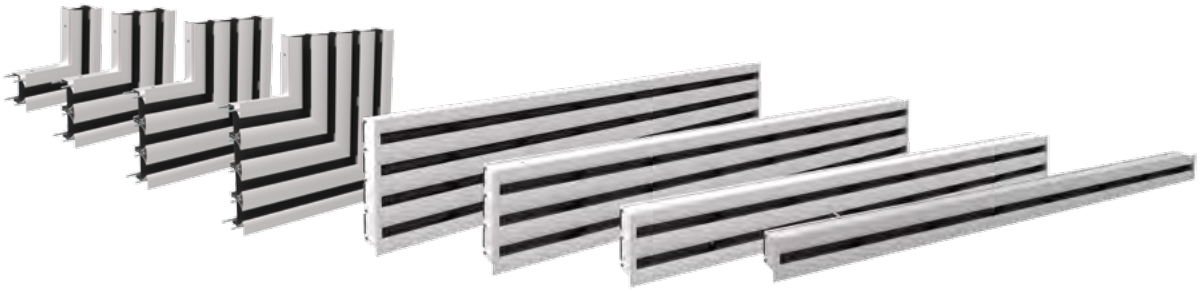

BS

Swimming Pool Slot Diffusers

Product information is available within the technical documentation TechSpec_TPI-95 and at www.systemair.com

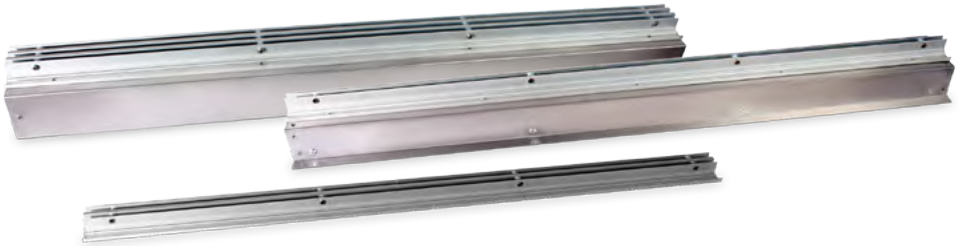

IMOS-Systemair · October 2017 · DataSheet_HELLA

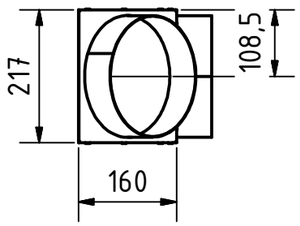

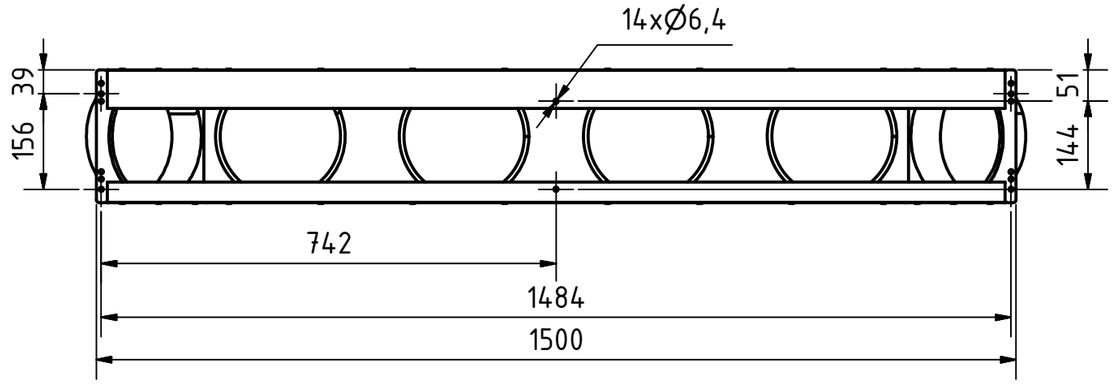

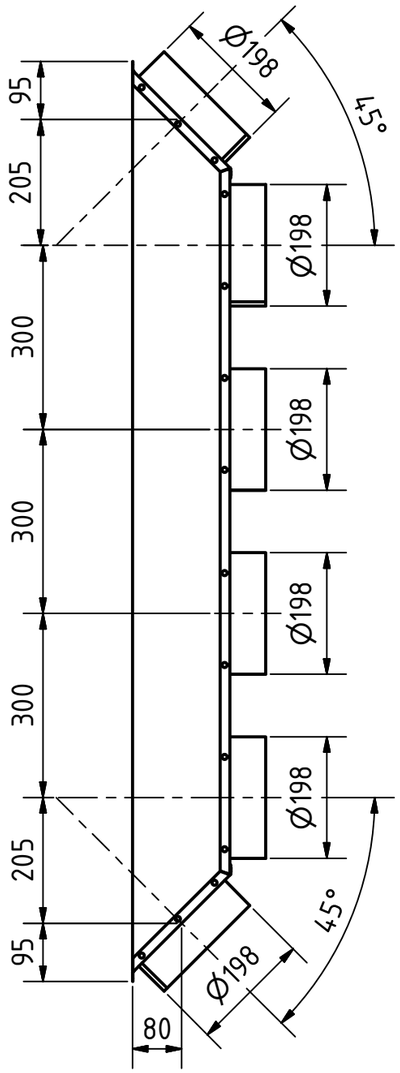

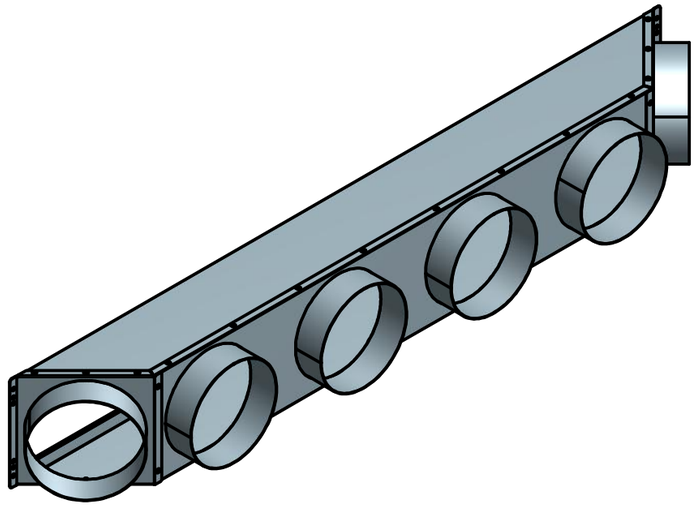

Responsible dept.	Technical reference	Document type		Material:		
Created By Hoffmann.And	Reviewed	Approved		Document state WorkInProgress	Scale (main) 1:5	Scale (sub) 1:5
FläktGroup	Title: Zubehör/Accessory Flex-Geko ZGF.8A042 (Ausblaskasten m. Rundst. DN200/Air discharge plen. w. nozzle DN200)			PRM-GF-2559-02		
				Revision Date 10.01.2018	Lang. de	Sheet: 1 of 1

TPM 112/15
Revision 1
Valid from 01/07/2016

MANDÍK®

SILENCER
SMR

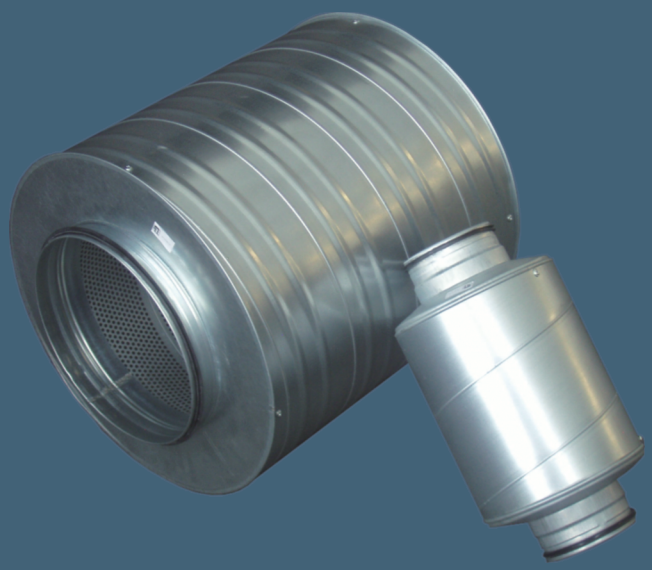

These technical specification state a row of manufactured sizes and models of silencers (further only silencer) SMR. It is valid for production, designing, ordering, delivery, assembly and operation.

I. CONTENT

II. GENERAL INFORMATION **2**

1. Description..... 2

2. Design..... 2

3. Dimensions, weights..... 3

III. TECHNICAL DATA **8**

4. Pressure loss and attenuation in the frequency bands..... 8

IV. MATERIAL, FINISHING **12**

5. Material..... 12

V. INSPECTION, TESTING **12**

6. Inspection..... 12

VI. PACKING, TRANSPORTATION, TAKE-OVER, STORAGE AND GUARANTEE **12**

7. Logistic terms..... 12

8. Guarantee..... 12

VII. ASSEMBLY, ATTENDANCE, MAINTENANCE AND REVISIONS **12**

9. Assembly..... 12

VIII. ORDERING INFORMATION **13**

10. Ordering key..... 13

II. GENERAL INFORMATION

1. Description

Fig. 1 Silencer SMR

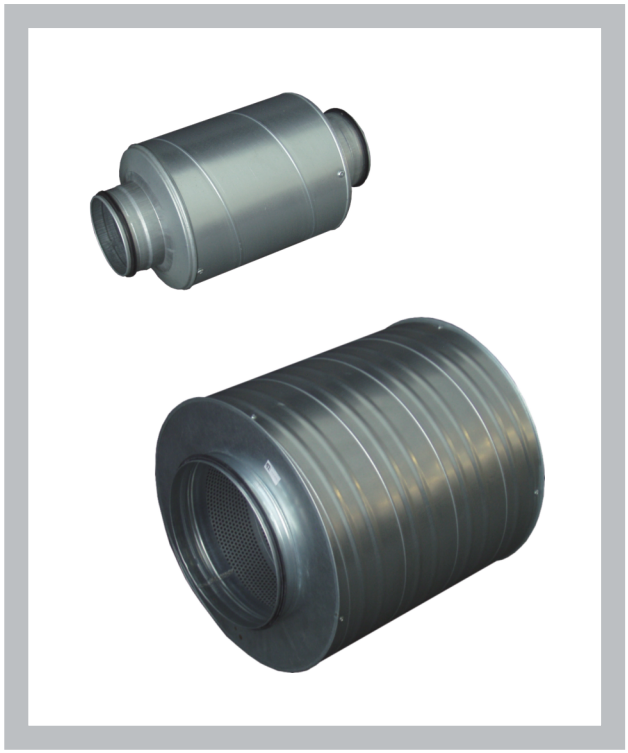

1.1. Silencers SMR are produced in absorptive design. They are intended for round ventilation systems ducts. Silencers reduce airborne noise transmitted by duct. Silencers are placed between noise source and protected room.

Silencers up to diameter 315 mm are connected to duct by using of reduction fixed to the silencer body. Silencers with diameter more than 315 mm are connected to duct by using of clutch NSL.

Silencer consist of the outer casing and inner perforated tube. This gap is filled by mineral wool with acoustic insulation properties. Insulation is coated by non woven fabric. Inner perforated tube is made of galvanized steel sheet.

1.2. Right damper function is secured under the following conditions:
a) Maximum air circulation speed is 12 m/s
b) Maximum pressure difference is 1500 Pa

Silencers are designed for macroclimatic areas with mild climate according to EN 60 721-3-3.

Silencers are suitable for systems without abrasive, chemical and adhesive particles.

Temperature in the place of installation is permitted to range from -20°C do +70°C

2. Design

2.1. Silencers are produced with insulation thickness 50 mm SMR-50 or with insulation thickness 100 mm SMR-100. Silencer with insulation thickness 100 mm could be suplly with central absorptive plate - design SMRB.

Silencers are produced depending on the nominal size in these lengths: 300, 500, 600, 900, 1000 1200 and 1500 mm.

3. Dimensions and weights

Fig. 2

SMR-50 nominal dimension D=100, D=125, D=160, D=200, D=100, D=250, D=315

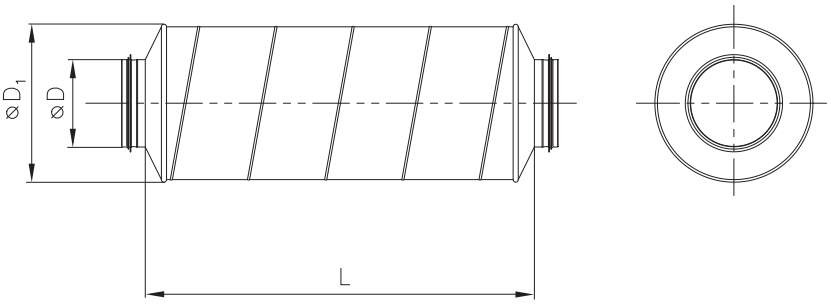

SMR-50 nominal dimension D=80, D=150, D=300, SMR-100 nominal dimension D≤300

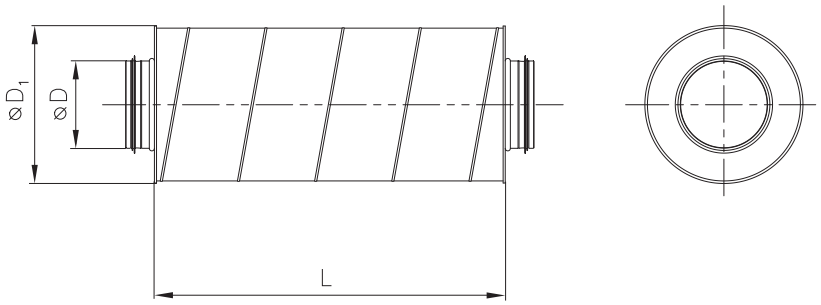

SMR-50, SMR-100 nominal dimension D>315

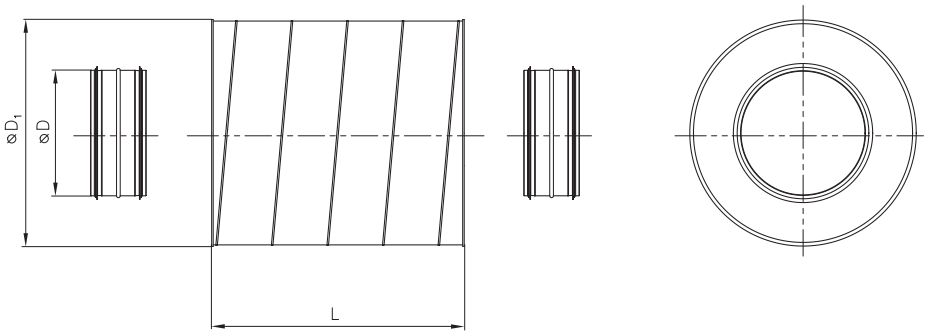

SMRB

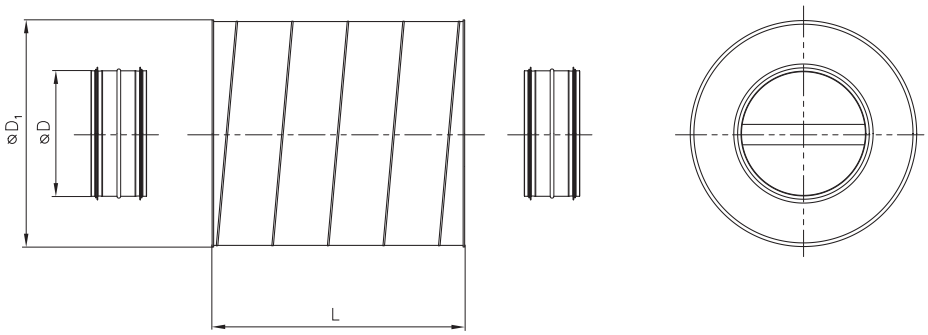

3.1. Dimensions and weights - silencers SMR-50

Tab. 3.1.1. Dimensions and weights- SMR-50

Nominal dimension	Ø D [mm]	Ø D_1 [mm]	L [mm]	Weight [kg]
SMR-50 80/300	80	180	300	2
SMR-50 80/500	80	180	500	3
SMR-50 80/600	80	180	600	3
SMR-50 80/900	80	180	900	5
SMR-50 80/1000	80	180	1000	6
SMR-50 80/1200	80	180	1200	7
SMR-50 100/300	100	200	300	2
SMR-50 100/500	100	200	500	3
SMR-50 100/600	100	200	600	3
SMR-50 100/900	100	200	900	5
SMR-50 100/1000	100	200	1000	6
SMR-50 100/1200	100	200	1200	7
SMR-50 125/300	125	224	300	3
SMR-50 125/500	125	224	500	4
SMR-50 125/600	125	224	600	4
SMR-50 125/900	125	224	900	7
SMR-50 125/1000	125	224	1000	7
SMR-50 125/1200	125	224	1200	9
SMR-50 150/300	150	250	300	4
SMR-50 150/500	150	250	500	4
SMR-50 150/600	150	250	600	6
SMR-50 150/900	150	250	900	8
SMR-50 150/1000	150	250	1000	8
SMR-50 150/1200	150	250	1200	10
SMR-50 160/300	160	250	300	3
SMR-50 160/500	160	250	500	5
SMR-50 160/600	160	250	600	6
SMR-50 160/900	160	250	900	8
SMR-50 160/1000	160	250	1000	8
SMR-50 160/1200	160	250	1200	10
SMR-50 200/300	200	315	300	4
SMR-50 200/500	200	315	500	6
SMR-50 200/600	200	315	600	7
SMR-50 200/900	200	315	900	10
SMR-50 200/1000	200	315	1000	11
SMR-50 200/1200	200	315	1200	12
SMR-50 250/500	250	355	500	9
SMR-50 250/600	250	355	600	11
SMR-50 250/900	250	355	900	14
SMR-50 250/1000	250	355	1000	12

Nominal dimension	⌀D [mm]	⌀D_1 [mm]	L [mm]	Weight [kg]
SMR-50 250/1200	250	355	1200	17
SMR-50 250/1500	250	355	1500	20
SMR-50 300/500	300	400	500	13
SMR-50 300/600	300	400	600	15
SMR-50 300/900	300	400	900	16
SMR-50 300/1000	300	400	1000	19
SMR-50 300/1200	300	400	1200	22
SMR-50 300/1500	300	400	1500	25
SMR-50 315/500	315	400	500	11
SMR-50 315/600	315	400	600	12
SMR-50 315/900	315	400	900	16
SMR-50 315/1000	315	400	1000	16
SMR-50 315/1200	315	400	1200	19
SMR-50 315/1500	315	400	1500	25
SMR-50 355/600	355	450	600	13
SMR-50 355/900	355	450	900	18
SMR-50 355/1000	355	450	1000	20
SMR-50 355/1200	355	450	1200	22
SMR-50 355/1500	355	450	1500	27
SMR-50 400/600	400	500	600	15
SMR-50 400/900	400	500	900	20
SMR-50 400/1000	400	500	1000	22
SMR-50 400/1200	400	500	1200	25
SMR-50 400/1500	400	500	1500	31
SMR-50 450/600	450	560	600	23
SMR-50 450/900	450	560	900	27
SMR-50 450/1000	450	560	1000	29
SMR-50 450/1200	450	560	1200	31
SMR-50 450/1500	450	560	1500	36
SMR-50 500/600	500	600	600	32
SMR-50 500/900	500	600	900	42
SMR-50 500/1000	500	600	1000	51
SMR-50 500/1200	500	600	1200	59
SMR-50 500/1500	500	600	1500	72
SMR-50 560/900	560	560	900	31
SMR-50 560/1000	560	560	1000	34
SMR-50 560/1200	560	560	1200	39
SMR-50 630/900	630	710	900	34
SMR-50 630/1000	630	710	1000	39
SMR-50 630/1200	630	710	1200	42

If is requested a different size, please contact the company MANDÍK, a.s.

3.2. Dimensions and weights - silencers SMR-100

Tab. 3.2.1. Dimensions and weights - SMR-100

Nominal dimension	Ø D [mm]	Ø D_1 [mm]	L [mm]	Weight [kg]
SMR-100 100/500	100	300	500	6
SMR-100 100/600	100	300	600	7
SMR-100 100/900	100	300	900	9
SMR-100 100/1000	100	300	1000	11
SMR-100 100/1200	100	300	1200	12
SMR-100 125/300	125	315	300	5
SMR-100 125/500	125	315	500	8
SMR-100 125/600	125	315	600	8
SMR-100 125/900	125	315	900	11
SMR-100 125/1000	125	315	1000	13
SMR-100 125/1200	125	315	1200	13
SMR-100 150/300	150	355	300	5
SMR-100 150/500	150	355	500	9
SMR-100 150/600	150	355	600	10
SMR-100 150/900	150	355	900	13
SMR-100 150/1000	150	355	1000	15
SMR-100 150/1200	150	355	1200	18
SMR-100 160/300	160	355	300	7
SMR-100 160/500	160	355	500	9
SMR-100 160/600	160	355	600	10
SMR-100 160/900	160	355	900	14
SMR-100 160/1000	160	355	1000	14
SMR-100 160/1200	160	355	1200	17
SMR-100 200/300	200	400	300	8
SMR-100 200/500	200	400	500	12
SMR-100 200/600	200	400	600	12
SMR-100 200/900	200	400	900	16
SMR-100 200/1000	200	400	1000	16
SMR-100 200/1200	200	400	1200	20
SMR-100 250/500	250	450	500	16
SMR-100 250/600	250	450	600	14
SMR-100 250/900	250	450	900	20
SMR-100 250/1000	250	450	1000	17
SMR-100 250/1200	250	450	1200	24
SMR-100 250/1500	250	450	1500	28
SMR-100 315/500	315	500	500	14
SMR-100 315/600	315	500	600	16
SMR-100 315/900	315	500	900	21
SMR-100 315/1000	315	500	1000	22
SMR-100 315/1200	315	500	1200	26
SMR-100 315/1500	315	500	1500	35
SMR-100 355/600	355	560	600	26
SMR-100 355/900	355	560	900	29
SMR-100 355/1000	355	560	1000	33
SMR-100 355/1200	355	560	1200	33

Nominal dimension	Ø D [mm]	Ø D_1 [mm]	L [mm]	Weight [kg]
SMR-100 355/1500	355	560	1500	47
SMR-100 400/600	400	600	600	21
SMR-100 400/900	400	600	900	30
SMR-100 400/1000	400	600	1000	29
SMR-100 400/1200	400	600	1200	41
SMR-100 400/1500	400	600	1500	51
SMR-100 450/600	450	630	600	32
SMR-100 450/900	450	630	900	40
SMR-100 450/1000	450	630	1000	36
SMR-100 450/1200	450	630	1200	46
SMR-100 450/1500	450	630	1500	56
SMR-100 500/600	500	710	600	23
SMR-100 500/900	500	710	900	35
SMR-100 500/1000	500	710	1000	39
SMR-100 500/1200	500	710	1200	43
SMR-100 500/1500	500	710	1500	50
SMR-100 630/900	630	800	900	50
SMR-100 630/1000	630	800	1000	48
SMR-100 630/1200	630	800	1200	58
SMR-100 630/1500	630	800	1500	66
SMR-100 710/1000	710	900	1000	59
SMR-100 710/1200	710	900	1200	64
SMR-100 710/1500	710	900	1500	73
SMR-100 800/1000	800	1000	1000	73
SMR-100 800/1200	800	1000	1200	73
SMR-100 800/1500	800	1000	1500	77
SMR-100 900/1000	900	1120	1000	80
SMR-100 900/1200	900	1120	1200	88
SMR-100 900/1500	900	1120	1500	95

If is requested a different size, please contact the company MANDÍK, a.s.

3.3. Dimensions and weights - silencers SMRB

Tab. 3.3.1. Dimensions and weights - SMRB

Nominal dimension	Ø D [mm]	Ø D_1 [mm]	L [mm]	Weight [kg]
SMRB 315/600	315	500	600	15
SMRB 315/900	315	500	900	22
SMRB 315/1200	315	500	1200	29
SMRB 400/600	400	600	600	20
SMRB 400/900	400	600	900	30
SMRB 400/1200	400	600	1200	40
SMRB 500/900	500	710	900	40
SMRB 500/1200	500	710	1200	53
SMRB 630/1200	630	800	1200	62
SMRB 630/1500	630	800	1500	78
SMRB 800/1200	800	1000	1200	80
SMRB 800/1500	800	1000	1500	99

If is requested a different size, please contact the company MANDÍK, a.s.

III. TECHNICAL DATA

4. Pressure loss and attenuation in the frequency bands

4.1. Pressure loss and attenuation - SMR-50

Tab. 4.1.1. Pressure loss and attenuation - SMR-50

Nominal dimension	Pressure loss [Pa]					Attenuation in octave bands						
	Velocity [m/s]					Attenuation [dB]						
	2	4	8	10	12	125 [Hz]	250 [Hz]	500 [Hz]	1000 [Hz]	2000 [Hz]	4000 [Hz]	8000 [Hz]
SMR-50 80/300	0,43	1,74	6,95	10,86	15,64	6	15	29	45	50	26	28
SMR-50 80/500	0,44	1,77	7,07	11,04	15,90	9	18	32	48	53	29	31
SMR-50 80/600	0,45	1,80	7,18	11,22	16,16	11	19	33	49	54	30	32
SMR-50 80/900	0,48	1,93	7,72	12,06	17,37	13	32	36	52	57	33	35
SMR-50 80/1000	0,50	2,01	8,03	12,54	18,06	14	23	37	53	58	34	36
SMR-50 80/1200	0,60	2,41	9,64	15,06	21,69	16	25	39	54	60	35	37
SMR-50 100/300	0,36	1,42	5,68	8,88	12,79	5	13	26	41	44	22	24
SMR-50 100/500	0,36	1,44	5,76	9,00	12,96	8	16	29	44	47	26	27
SMR-50 100/600	0,37	1,47	5,88	9,18	13,22	9	17	30	45	49	27	29
SMR-50 100/900	0,40	1,61	6,45	10,08	14,52	12	19	32	48	51	29	31
SMR-50 100/1000	0,42	1,68	6,72	10,50	15,12	13	21	34	49	52	30	32
SMR-50 100/1200	0,60	2,41	9,64	15,06	21,69	15	23	35	50	54	32	34
SMR-50 125/300	0,29	1,15	4,61	7,20	10,37	4	11	22	37	41	19	21
SMR-50 125/500	0,29	1,17	4,68	7,32	10,54	7	14	26	40	44	22	24
SMR-50 125/600	0,30	1,20	4,80	7,50	10,80	8	15	27	41	45	24	25
SMR-50 125/900	0,34	1,34	5,38	8,40	12,10	11	18	29	44	47	26	28
SMR-50 125/1000	0,35	1,41	5,64	8,82	12,70	12	19	31	45	49	27	29
SMR-50 125/1200	0,50	2,02	8,06	12,60	18,14	14	21	32	46	50	29	31
SMR-50 150/300	0,34	1,34	5,38	8,40	12,10	4	11	23	34	36	18	19
SMR-50 150/500	0,34	1,36	5,45	8,52	12,27	7	14	26	37	39	21	22
SMR-50 150/600	0,35	1,39	5,57	8,70	12,53	8	15	27	39	41	22	23
SMR-50 150/900	0,38	1,54	6,14	9,60	13,82	11	18	29	42	43	25	26
SMR-50 150/1000	0,40	1,61	6,45	10,08	14,52	12	19	30	42	44	26	27
SMR-50 150/1200	0,46	1,82	7,30	11,40	16,42	14	21	32	44	46	27	28
SMR-50 160/300	0,24	0,96	3,84	6,00	8,64	3	9	20	33	35	16	18
SMR-50 160/500	0,25	0,99	3,96	6,18	8,90	6	12	23	36	38	19	21
SMR-50 160/600	0,25	1,02	4,07	6,36	9,16	7	14	24	37	39	21	22
SMR-50 160/900	0,29	1,15	4,61	7,20	10,37	10	16	26	40	42	23	25
SMR-50 160/1000	0,31	1,23	4,92	7,68	11,06	11	17	28	41	43	24	26
SMR-50 160/1200	0,41	1,63	6,53	10,20	14,69	13	19	29	42	44	26	27
SMR-50 200/300	0,17	0,67	2,69	4,20	6,05	2	7	16	31	31	15	16
SMR-50 200/500	0,17	0,69	2,76	4,32	6,22	5	10	19	34	34	18	19
SMR-50 200/600	0,18	0,72	2,88	4,50	6,48	6	11	20	35	35	19	20
SMR-50 200/900	0,22	0,86	3,46	5,40	7,78	8	13	23	38	38	22	23
SMR-50 200/1000	0,24	0,94	3,76	5,88	8,47	9	15	24	39	39	23	24
SMR-50 200/1200	0,34	1,34	5,38	8,40	12,10	11	17	26	41	41	25	26
SMR-50 250/500	0,18	0,74	2,96	4,62	6,65	4	9	18	29	27	15	16
SMR-50 250/600	0,19	0,77	3,07	4,80	6,91	5	11	19	30	28	16	18
SMR-50 250/900	0,23	0,91	3,65	5,70	8,21	8	13	22	33	31	19	20
SMR-50 250/1000	0,25	0,99	3,96	6,18	8,90	9	14	23	33	32	20	21

Nominal dimension	Pressure loss [Pa]					Attenuation in octave bands						
	Velocity [m/s]					Attenuation [dB]						
	2	4	8	10	12	125 [Hz]	250 [Hz]	500 [Hz]	1000 [Hz]	2000 [Hz]	4000 [Hz]	8000 [Hz]
SMR-50 250/1200	0,35	1,39	5,57	8,70	12,53	11	17	25	35	34	21	23
SMR-50 250/1500	0,40	1,58	6,34	9,90	14,26	12	18	26	37	35	23	24
SMR-50 300/500	0,15	0,59	2,34	3,66	5,27	4	8	16	25	23	13	15
SMR-50 300/600	0,16	0,62	2,50	3,90	5,62	5	10	18	27	25	14	16
SMR-50 300/900	1,90	7,58	30,30	47,40	68,26	7	12	20	30	27	17	18
SMR-50 300/1000	0,21	0,84	3,34	5,22	7,52	8	13	21	30	28	18	19
SMR-50 300/1200	0,31	1,24	4,95	7,74	11,15	10	15	23	32	30	20	21
SMR-50 300/1500	0,37	1,50	5,99	9,36	13,48	12	17	24	34	32	21	23
SMR-50 315/500	0,12	0,50	2,00	3,12	4,49	4	7	14	23	21	13	14
SMR-50 315/600	0,13	0,53	2,11	3,30	4,75	5	8	16	25	19	14	15
SMR-50 315/900	0,17	0,67	2,69	4,20	6,05	7	11	18	28	21	17	18
SMR-50 315/1000	0,19	0,75	3,00	4,68	6,74	8	12	19	28	22	18	19
SMR-50 315/1200	0,29	1,15	4,61	7,20	10,37	10	14	21	30	24	19	21
SMR-50 315/1500	0,35	1,39	5,57	8,70	12,53	12	16	23	32	26	21	22
SMR-50 355/600	0,11	0,43	1,73	2,70	3,89	4	9	16	22	17	13	14
SMR-50 355/900	0,14	0,57	2,27	3,54	5,10	7	11	19	25	19	16	17
SMR-50 355/1000	0,16	0,64	2,57	4,02	5,79	8	12	20	26	21	17	18
SMR-50 355/1200	0,26	1,05	4,19	6,54	9,42	10	15	22	27	22	18	20
SMR-50 355/1500	0,33	1,33	5,34	8,34	12,01	11	16	23	29	24	20	21
SMR-50 400/600	0,09	0,37	1,50	2,34	3,37	4	8	15	20	15	12	13
SMR-50 400/900	0,13	0,52	2,07	3,24	4,67	6	10	18	23	17	15	16
SMR-50 400/1000	0,15	0,59	2,34	3,66	5,27	8	12	19	24	18	16	17
SMR-50 400/1200	0,25	1,00	3,99	6,24	8,99	9	14	21	25	20	17	19
SMR-50 400/1500	0,33	1,31	5,22	8,16	11,75	11	15	22	27	22	19	20
SMR-50 450/600	0,08	0,34	1,34	2,10	3,02	4	8	16	18	13	12	12
SMR-50 450/900	1,20	4,80	19,20	30,00	43,20	6	11	18	21	16	15	15
SMR-50 450/1000	0,14	0,56	2,23	3,48	5,01	7	12	19	22	17	16	16
SMR-50 450/1200	0,24	0,96	3,84	6,00	8,64	9	14	21	23	18	17	17
SMR-50 450/1500	0,31	1,25	4,99	7,80	11,23	11	16	23	25	20	19	19
SMR-50 500/600	0,07	0,29	1,15	1,80	2,59	3	7	14	17	11	11	12
SMR-50 500/900	0,11	0,43	1,73	2,70	3,89	6	9	16	20	14	13	14
SMR-50 500/1000	0,12	0,50	2,00	3,12	4,49	7	11	17	21	15	14	15
SMR-50 500/1200	0,23	0,91	3,65	5,70	8,21	9	13	19	22	17	16	17
SMR-50 500/1500	0,30	1,21	4,84	7,56	10,89	10	14	20	24	18	17	19
SMR-50 560/900	0,10	0,39	1,57	2,46	3,54	6	9	15	19	13	12	14
SMR-50 560/1000	0,12	0,47	1,88	2,94	4,23	7	10	16	20	14	13	15
SMR-50 560/1200	0,22	0,87	3,49	5,46	7,86	9	13	18	21	15	15	16
SMR-50 630/900	0,09	0,36	1,42	2,22	3,20	5	8	14	18	11	12	13
SMR-50 630/1000	0,11	0,43	1,73	2,70	3,89	6	10	16	18	12	13	14
SMR-50 630/1200	0,21	0,84	3,34	5,22	7,52	8	12	17	20	14	14	15

4.2. Pressure loss and attenuation SMR-100

Tab. 4.2.1. Pressure loss and attenuation - SMR-100

Nominal Dimension	Pressure loss [Pa]					Attenuation in octave bands						
	Velocity [m/s]					Attenuation [dB]						
	2	4	8	10	12	125 [Hz]	250 [Hz]	500 [Hz]	1000 [Hz]	2000 [Hz]	4000 [Hz]	8000 [Hz]
SMR-100 100/500	0,26	1,04	4,15	6,48	9,33	20	29	40	44	52	27	27
SMR-100 100/600	0,28	1,13	4,53	7,08	10,20	21	30	44	48	53	29	28
SMR-100 100/900	0,34	1,34	5,38	8,40	12,10	22	34	52	57	57	32	31
SMR-100 100/1000	0,35	1,40	5,61	8,76	12,61	22	34	55	60	58	33	33
SMR-100 100/1200	0,37	1,50	5,99	9,36	13,48	24	37	58	64	61	34	34
SMR-100 125/300	0,19	0,77	3,07	4,80	6,91	17	24	38	42	51	26	28
SMR-100 125/500	0,25	0,99	3,96	6,18	8,90	18	26	36	42	49	25	25
SMR-100 125/600	0,27	1,08	4,34	6,78	9,76	18	26	36	42	49	25	25
SMR-100 125/900	0,33	1,31	5,22	8,16	11,75	20	30	48	55	54	29	30
SMR-100 125/1000	0,34	1,36	5,45	8,52	12,27	20	31	51	58	55	31	31
SMR-100 125/1200	0,36	1,46	5,84	9,12	13,13	21	34	54	62	58	31	33
SMR-100 150/300	0,18	0,72	2,88	4,50	6,48	15	21	33	37	44	23	25
SMR-100 150/500	0,24	0,94	3,76	5,88	8,47	20	29	40	44	52	27	27
SMR-100 150/600	0,26	1,04	4,15	6,48	9,33	17	25	36	41	43	23	24
SMR-100 150/900	0,31	1,25	4,99	7,80	11,23	18	28	44	50	47	26	27
SMR-100 150/1000	0,33	1,31	5,22	8,16	11,75	18	28	47	53	48	28	28
SMR-100 150/1200	0,35	1,40	5,61	8,76	12,61	24	37	58	64	61	34	34
SMR-100 160/300	0,17	0,67	2,69	4,20	6,05	16	21	29	34	41	20	23
SMR-100 160/500	0,23	0,91	3,65	5,70	8,21	17	23	28	34	39	19	20
SMR-100 160/600	0,25	1,01	4,03	6,30	9,07	17	24	32	38	40	21	21
SMR-100 160/900	0,31	1,23	4,92	7,68	11,06	18	27	40	47	44	24	25
SMR-100 160/1000	0,32	1,29	5,15	8,04	11,58	19	28	43	50	45	25	26
SMR-100 160/1200	0,35	1,38	5,53	8,64	12,44	20	31	46	54	48	26	28
SMR-100 200/300	0,16	0,64	2,57	4,02	5,79	13	18	27	29	36	18	21
SMR-100 200/500	0,20	0,82	3,26	5,10	7,34	14	20	25	28	34	17	18
SMR-100 200/600	0,23	0,91	3,65	5,70	8,21	14	21	29	33	35	19	19
SMR-100 200/900	0,28	1,12	4,49	7,02	10,11	15	25	38	42	39	22	22
SMR-100 200/1000	0,30	1,18	4,72	7,38	10,63	16	25	41	45	40	23	24
SMR-100 200/1200	0,32	1,28	5,11	7,98	11,49	17	28	43	48	43	24	26
SMR-100 250/500	0,17	0,67	2,69	4,20	6,05	11	17	22	26	29	15	16
SMR-100 250/600	0,19	0,77	3,07	4,80	6,91	12	18	26	30	30	17	17
SMR-100 250/900	0,24	0,98	3,92	6,12	8,81	13	22	34	39	34	20	20
SMR-100 250/1000	0,26	1,04	4,15	6,48	9,33	14	22	37	42	35	21	22
SMR-100 250/1200	0,28	1,13	4,53	7,08	10,20	15	25	40	46	38	22	23
SMR-100 250/1500	0,31	1,25	4,99	7,80	11,23	16	29	44	51	42	23	26
SMR-100 315/500	0,14	0,57	2,27	3,54	5,10	10	16	17	22	25	13	14
SMR-100 315/600	0,19	0,78	3,11	4,86	7,00	14	17	21	26	26	15	15
SMR-100 315/900	0,21	0,84	3,34	5,22	7,52	12	20	39	35	30	18	19
SMR-100 315/1000	0,23	0,93	3,72	5,82	8,38	12	21	32	38	31	19	20
SMR-100 315/1200	0,26	1,05	4,19	6,54	9,42	14	24	35	42	34	22	23
SMR-100 315/1500	0,12	0,47	1,88	2,94	4,23	15	28	39	47	38	21	25
SMR-100 355/600	0,11	0,44	1,77	2,76	3,97	10	15	20	23	23	13	14
SMR-100 355/900	0,17	0,66	2,65	4,14	5,96	11	19	28	32	27	16	18
SMR-100 355/1000	0,18	0,71	2,84	4,44	6,39	11	19	31	35	28	18	19
SMR-100 355/1200	0,20	0,81	3,23	5,04	7,26	13	22	34	39	31	18	21

Nominal dimension	Pressure loss [Pa]					Attenuation in octave bands						
	Velocity [m/s]					Attenuation [dB]						
	2	4	8	10	12	125 [Hz]	250 [Hz]	500 [Hz]	1000 [Hz]	2000 [Hz]	4000 [Hz]	8000 [Hz]
SMR-100 355/1500	0,23	0,93	3,72	5,82	8,38	14	26	38	44	35	19	24
SMR-100 400/600	0,08	0,32	1,27	1,98	2,85	9	15	18	21	20	12	11
SMR-100 400/900	0,13	0,53	2,11	3,30	4,75	11	18	26	30	24	14	14
SMR-100 400/1000	0,15	0,59	2,34	3,66	5,27	11	18	29	33	25	16	16
SMR-100 400/1200	0,17	0,68	2,73	4,26	6,13	12	22	32	37	28	16	17
SMR-100 400/1500	0,20	0,80	3,19	4,98	7,17	14	26	36	42	32	17	20
SMR-100 450/600	0,05	0,19	0,77	1,20	1,73	9	14	16	18	17	10	10
SMR-100 450/900	0,10	0,40	1,61	2,52	3,63	10	17	24	27	21	13	13
SMR-100 450/1000	0,12	0,46	1,84	2,88	4,15	10	18	27	30	22	15	15
SMR-100 450/1200	0,14	0,56	2,23	3,48	5,01	11	21	30	34	25	15	16
SMR-100 450/1500	0,17	0,67	2,69	4,20	6,05	13	25	34	39	29	16	19
SMR-100 500/600	0,02	0,08	0,31	0,48	0,69	8	13	14	15	15	10	9
SMR-100 500/900	0,07	0,29	1,15	1,80	2,59	10	16	22	24	19	13	13
SMR-100 500/1000	0,09	0,35	1,38	2,16	3,11	10	17	25	27	20	14	14
SMR-100 500/1200	0,11	0,44	1,77	2,76	3,97	11	20	28	31	23	15	16
SMR-100 500/1500	0,14	0,56	2,23	3,48	5,01	13	24	32	36	27	16	19
SMR-100 630/900	0,02	0,10	0,38	0,60	0,86	8	15	20	22	17	11	11
SMR-100 630/1000	0,04	0,14	0,58	0,90	1,30	9	15	23	25	18	12	12
SMR-100 630/1200	0,06	0,24	0,96	1,50	2,16	10	18	26	29	21	13	14
SMR-100 630/1500	0,09	0,36	1,46	2,28	3,28	11	22	29	34	25	14	17
SMR-100 710/1000	0,02	0,08	0,31	0,48	0,69	8	14	20	23	16	11	10
SMR-100 710/1200	0,04	0,17	0,69	1,08	1,56	9	17	23	27	18	11	12
SMR-100 710/1500	0,07	0,30	1,19	1,86	2,68	11	21	26	30	22	12	15
SMR-100 800/1000	0,01	0,04	0,15	0,24	0,35	8	14	20	22	15	10	10
SMR-100 800/1200	0,03	0,13	0,54	0,84	1,21	9	17	22	25	18	11	12
SMR-100 800/1500	0,06	0,25	1,00	1,56	2,25	10	21	26	30	22	12	15
SMR-100 900/1000	0,00	0,01	0,04	0,06	0,09	7	13	19	20	13	9	10
SMR-100 900/1200	0,03	0,11	0,42	0,66	0,95	8	16	22	24	16	10	11
SMR-100 900/1500	0,06	0,23	0,92	1,44	2,07	10	20	26	29	20	11	14

4.3. Pressure loss and attenuation - SMRB

Tab. 4.3.1. Pressure loss and attenuation - SMRB

Nominal dimension	Pressure loss [Pa]					Attenuation in octave bands						
	Velocity [m/s]					Attenuation [dB]						
	2	4	8	10	12	125 [Hz]	250 [Hz]	500 [Hz]	1000 [Hz]	2000 [Hz]	4000 [Hz]	8000 [Hz]
SMRB 315/600	4,8	9,0	30,0	51,0	66,0	7	15	18	26	34	24	24
SMRB 315/900	7,2	13,5	45,0	76,5	99,0	11	18	26	37	40	28	29
SMRB 315/1200	9,6	18,0	60,0	102,0	132,0	15	21	33	41	46	40	44
SMRB 400/600	3,6	7,2	24,0	40,8	51,0	8	9	16	22	24	19	19
SMRB 400/900	5,4	10,8	36,0	61,2	76,5	11	14	22	34	32	23	24
SMRB 400/1200	7,2	14,4	48,0	81,6	102,0	11	21	30	38	43	28	32
SMRB 500/900	3,6	7,2	24,3	34,2	47,7	8	12	19	27	21	19	19
SMRB 500/1200	4,8	9,6	32,4	45,6	63,6	10	16	26	35	29	22	25
SMRB 630/1200	2,4	8,4	26,4	39,6	60,0	8	11	23	38	23	19	19
SMRB 630/1500	3,0	10,5	33,0	49,5	75,0	10	15	23	39	26	20	23
SMRB 800/1200	1,2	4,8	19,2	34,8	57,6	5	9	17	23	21	16	17
SMRB 800/1500	1,5	6,0	24,0	43,5	72,0	5	12	19	26	23	18	20

IV. MATERIAL, FINISHING

5. Material

5.1. Casing and inner perforated tube are made of galvanized steel sheet.

5.2. Acoustic absorber is made of mineral wool coated by non woven fabric.

V. INSPECTION, TESTING

6. Inspection, testing

6.1. The appliance is constructed and preset by the manufacturer, its operation is dependent on proper installation and adjustment.

VI. PACKING, TRANSPORTATION, TAKE-OVER, STORAGE AND GUARANTEE

7. Logistic terms

7.1. Silencers are transported by box freight vehicles without direct weather impact. Silencers must be protected against mechanical damages when transported and manipulated.

7.2. Silencers must be stored indoor in environment without any aggressive vapours, gases or dust. Indoor temperature must be in the range from -5°C to +40°C and relative humidity max. 80%.

VI. ASSEMBLY, ATTENDANCE, MAINTENANCE AND REVISIONS

8. Assembly

8.1. All effective safety standards and directives must be observed during silencers assembly.

8.2. The assembly consists of installation of the damper into the air duct.

VIII. ORDERING INFORMATION

10. Ordering key

SMR-100 160/600 TPM 112/15

- TPM 112/15 — technical specifications
- 160/600 — dimension L (lenght)
- 160/600 — nominal dimension
- SMR-100 — insulation thickness*
- SMR-100 — type

*** Silencers SMRB are made with only the insulation thickness 100 mm. In order not specified.**

TPM 083/12

Revision 5
Valid from 7/3/18

EN 15650:2010-09

MANDÍK®

FIRE DAMPER

FDMC

These technical specifications state a row of manufactured sizes and models of fire dampers (further only dampers) FDMC. It is valid for production, designing, ordering, delivery, assembly and operation.

I. CONTENT

II. GENERAL INFORMATION **2**

1. Description..... 2
2. Damper Design..... 3
3. Communication and control devices..... 6
4. Dimensions, weights..... 9
5. Placement and Assembly..... 10
6. Statement of installations..... 12
7. Suspension of fire dampers..... 18

III. TECHNICAL DATA **21**

8. Pressure loss..... 21
9. Coefficient of local pressure loss..... 21
10. Noise data..... 22

IV. MATERIAL, FINISHING **24**

11. Material..... 24

VI. INSPECTION, TESTING **24**

12. Inspection, testing..... 24

VI. TRANSPORTATION AND STORAGE **24**

13. Logistic terms..... 24

VII. ASSEMBLY, ATTENDANCE, MAINTENANCE AND REVISIONS **24**

14. Assembly..... 24
15. Entry into service and revisions..... 24

VIII. DATA OF PRODUCT **25**

16. Data label..... 25
17. Quick review..... 25

IX. ORDERING INFORMATION **26**

18. Ordering key..... 26

II. GENERAL INFORMATION

1. Description

1.1. Fire dampers are shutters in duct systems of air-conditioning devices that prevent spreading the fire and combustion products from one fire segment to the other one by means of closing the air duct in the points of fire separating constructions.
Dampers blade automatically closes air duct using a shutting spring or an actuating mechanism back spring. The back spring of the actuating mechanism is started when the thermoelectrical starting mechanism BAT72B-S is activated, when a reset button on BAE 72B-S is pushed or when a power supply of the actuating mechanism is stopped.
The damper is sealed with a silicon packing against smoke penetration after closing the blade. At the same time, the damper blade is bedded in a material which enlarges its capacity and air proofs the air duct.
Dampers have one inspection hole, since the shutting device and the inspection hole can be set into the most advantageous position (with respect to the operation and manipulation with the control device).

Fig. 1 Fire damper FDMC

1.2. Damper characteristics

- CE certified acc. to EN 15650
- Tested in accordance with EN 1366-2
- Classified acc. to EN 13501-3+A1
- Fire resistance EIS 60
- External Casing leakage class min. C, Internal leakage class 3 (D=200 - 400 mm) and class 2 (D=180 mm) and class 1 (D=100 - 160 mm) acc. to EN 1751
- Cycling test in class C 10000 acc. to EN 15650
- Corrosion resistant acc. to EN 15650
- ES Certificate of conformity No. 1391-CPR-0090/2014
- Declaration of Perfomance No. PM/FDMC/01/16/1
- Hygienic assessment of fire dampers - Report No. 1.6/13/16/1

1.3. Working conditions

Exact damper function is provided under the following conditions:

a) Maximum air circulation speed: 12 $m.s^{-1}$
Maximum pressure difference: 1500 Pa
b) The air circulation in the whole damper section must be secured as steady on whole surface.

Operation of the dampers does not depend on the direction of air circulation. The dampers can be located in an arbitrary position.

Dampers are suitable for systems without abrasive, chemical and adhesive particles.

Dampers are designed for macroclimatic areas with mild climate according to EN 60 721-3-3.

Temperature in the place of installation is permitted to range from - 30°C to + 50°C.

2. Damper design

2.1. Design with actuating mechanism

Design .40, .50

FDMB is always equipped by electric actuating mechanism BFL, BFN, BF 230-T or BFL, BFN, BF 230-T (further only "actuating mechanism"). After being connected to power supply AC/DC 24V or 230V, the actuating mechanism displaces the damper blade into operation position "OPEN" and at the same time it pre-stretches its back spring. When the actuating mechanism is under voltage, the damper blade is in the position "OPEN" and the back spring is pre-stretched. Time needed for full opening of the flap blade from the position "CLOSED" to the position "OPEN" is maximum 140 sec. If the actuating power supply is cut off (due to loss of supply voltage, or pushing the reset button on the thermoelectrical starting mechanism BAT), the back spring displaces the damper blade into the breakdown position "CLOSED". The time of displacing the blade from the position "OPEN" to the position "CLOSED" takes maximum 20 sec. In case that the power supply is restored again (the blade can be in any position), the actuating mechanism starts to re-displace the damper blade into the position "OPEN".
A thermoelectrical starting mechanism BAT, which contains two thermal fuses Tf1 and Tf2, is a part of the actuating mechanism. These fuses are activated when temperature +72 °C has been exceeded (the fuse Tf1 when the temperature around the damper and the fuses Tf2 when the temperature inside the air-conditioning piping has been exceeded). After the thermal fuse Tf1 or Tf2 has been activated, the power supply is permanently and irreversibly cut off and the actuating mechanism, by means of the pre-stretched spring, displaces the damper blade into the breakdown position "CLOSED".

Signalisation of damper blade position "OPEN" a "CLOSE" is provided by two limit switches.

Fig. 2 Fire damper FDMC - actuating mechanism

Fig. 3 Actuating mechanism BELIMO BFL 230-T

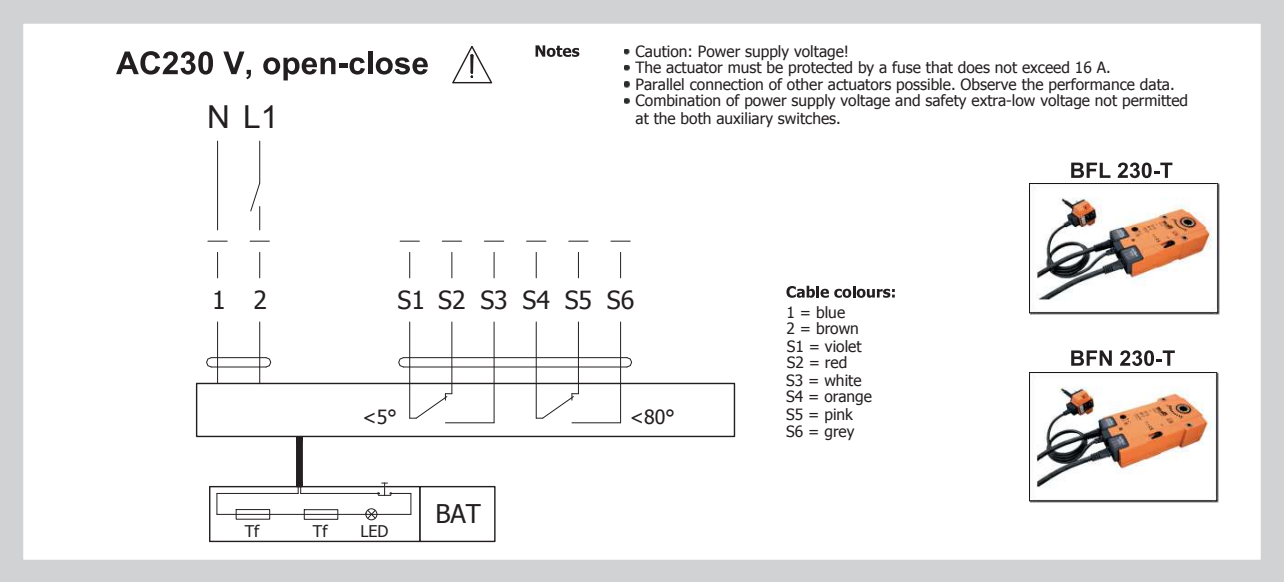

Fig. 4 Actuating mechanism BELIMO BFL 24-T(-ST)

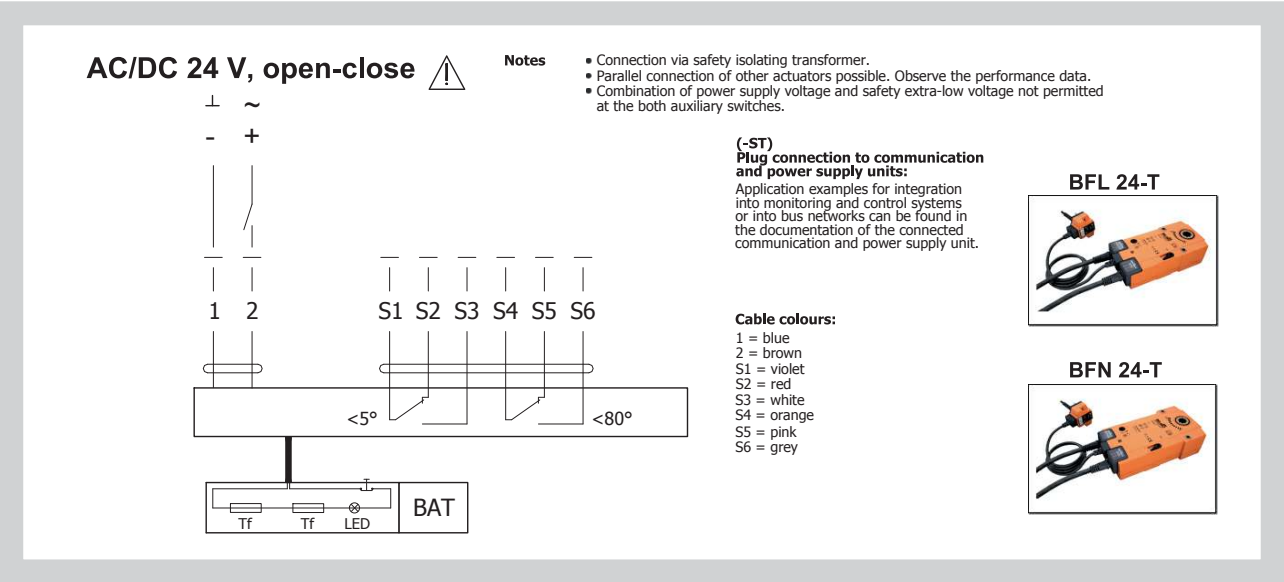

Tab. 2.1.1. Actuating mechanism BELIMO BFL24-T(-ST), BFN 24-T(-ST), BFL 230-T a BFN 230-T

Actuating mechanism BELIMO	BFL, BFN 230-T	BFL, BFN 24-T(-ST)
Nominal voltage	AC 230 V 50/60 Hz	AC 24 V 50/60 Hz DC 24 V
Power consumption - motoring - holding	3,5/5 W 1,1/2,1 W	2,5/4 W 0,8/1,4 W
Dimensioning	6,5/10 VA (Imax 4 A @ 5 ms)	4/6 VA (Imax 8,3 A @ 5 ms)
Protection class	II	III
Degree of protection	IP 54	
Running time - motor - spring return	<60 s ~ 20 s	
Ambient temperature - normal duty - safety duty - non-operating temperature	- 30 °C … 55 °C The safe position will be attained up to max. 75°C - 40 °C … 55 °C	
Connecting - motor - auxiliary switch	cable 1 m, 2 x 0,75 mm² (BFL/BFN 24-T-ST) with 3-pin plug-in connectors cable 1 m, 6 x 0,75 mm² (BFL/BFN 24-T-ST) with 6-pin plug-in connectors	
Thermal trips	duct outside temperature 72 °C duct inside temperature 72 °C	

2.3. Design with the communication and supply device

Design .60

Design with the communication and supply device BKN 230-24 and the actuating mechanism BFL 24-T-ST. It simplifies electrical wiring and interconnection of fire damper. It facilitates on site check and enables central control and checks of fire damper by means of a simple 2-conductor wiring.
BKN 230-24 functions as a decentralized network device for supplying the actuating mechanism BFL 24-T-ST with a spring back drive on one hand and on the other hand it transmits the signal information about the fire damper position OPERATION and FAILURE through 2-conductor wiring to the central. Control command SWITCHED ON - SWITCHED OFF from the central through BKN 230-24 goes through the same wiring to the actuating mechanism.
To simplify the connection, the actuating mechanism BFL 24-T-ST is equipped with connecting plugs that are inserted directly to BKN 230-24. BKN 230-24 is supplied with a conductor and an EURO plug to be connected to the 230V mains.
2- conductor wiring is connected to BKN 230-24 by means of terminals 6 and 7.
If the drive is supposed to be controlled without any signal from the central, it can be switched on by means of a bridge between the terminals 3 and 4. A green LED pilot light on BKN 230-24 is on when voltage is present in the drive (AC 24V). If the button on BAT72B-S is switched on or if the power supply (e.g. by a signal from ELECTRICAL FIRE SIGNALISATION) is disconnected, the fire damper position will be "FAILURE".
Communication and supply device BKN 230-24 has to be placed near the damper. It is necessary for easy connection of actuating system equipped by BKN 230-24 device.

Fig. 5 Fire damper FDMD with actuating mechanism and BKN

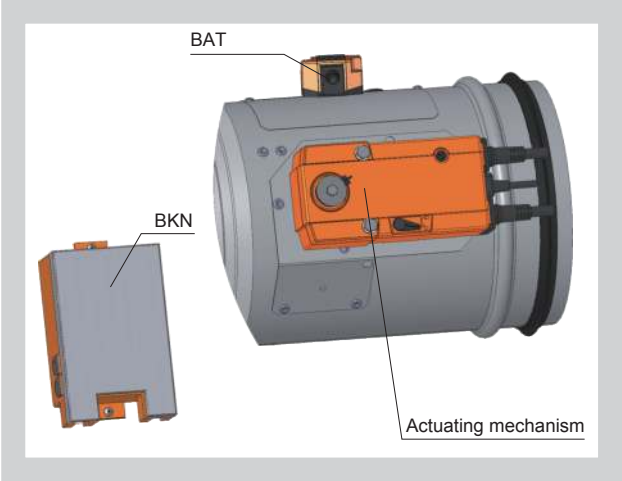

Tab. 2.3.1. Communication and Supply Device BKN 230-24

Communication and Supply Device	BKN 230-24
Nominal voltage	AC 230V 50/60Hz
Power consumption	3,5 W (operating position)
Dimensioning	11 VA (including actuating mechanism)
Protection Class	II
Degree of protection	IP 42
Ambient Temperature Storage Temperature	- 30 °C … + 50 °C - 40 °C … + 50 °C
Connection - mains - drive - terminal board	Cable 0,9 m with EURO plug of 26 type 6 pole plug, 3 pole plug screw terminals for conductor 2x1,5 mm²

Tab. 2.3.2. Communication and Supply Device BKN 230-24

Communication and Supply Device	BKN 230-24
Nominal voltage	AC 230V 50/60Hz
Power consumption	3,5 W (operating position)
Dimensioning	11 VA (including actuating mechanism)
Protection Class	II
Degree of protection	IP 42
Ambient Temperature Storage Temperature	- 30 °C … + 50 °C - 40 °C … + 50 °C
Connection - mains - drive - terminal board	Cable 0,9 m with EURO plug of 26 type 6 pole plug, 3 pole plug screw terminals for conductor 2x1,5 mm²

Fig. 6 Communication and Supply Device BKN 230-24

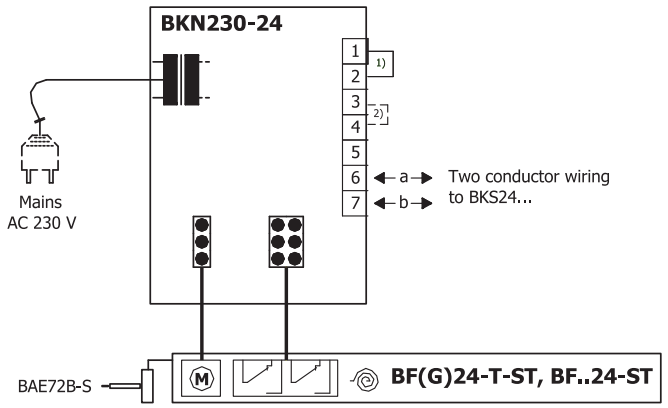

1) Bridge has been installed by the manufacturer. If needed, it can be removed and replaced with a thermoelectrical starting mechanism.
If terminals 1 and 2 are not interconnected, safety function is initiated.
2) Bridge can be used only for starting and without BKS 24...!

3. Communication and control devices

3.1. BKS 24-9A communication and control device is used for group control and checks of 1 to 9 fire dampers with the actuating mechanism BFL 24-T-ST in connection with the supply and communication device BKN 230-24. Signalisation of the damper position is individual; the dampers can be controlled and tested only as a group. BKS 24-9A is intended for use in the distribution board and displays the operation situations and failure reports of the connected fire dampers. It is possible to signalise functions such as the damper position and failure reports or to transmit them further to the system by means of integrated auxiliary switches. BKS 24-9A receives signals from BKN 230-24 through the two-conductor wiring and issues control commands. Proper damper operation is indicated by two light LED diodes:

Control ON = position OPERATION
Control OFF = position FAILURE

If the fire dampers do not reach the given position in time tolerable for displacing, the appropriate light diode FAILURE starts to flash and K1 contact is opened (current failure). In case that the faulty damper finally reaches its given position, K1 is closed and the failure report lights up shines (the failure is saved in memory).
K2 - the auxiliary contact - is used for signalisation of the flap position to the master device. Function of this auxiliary contact can be programmed through the terminal 14 according to the Tab. 3.1.1.

Tab. 3.1.1. BKS 24 -9A contacts K1 and K2

K1 Function Contact		Programming K2 Auxiliary Contact		
Situation	**State**	**Function**	**Interconnection**	**State**
Current Failure	15 — 16	K2 contact is on if all the damperss are open	14 — 11	17 — 18
		K2 contact is on if the damper No. 1 is open	14 — 12	
No Failure	15 — 16	K2 contact is on if all the dampers are closed	14 open	

Function check can be done in the position OPERATION by means of pushing the TEST button. While the button is pushed, the flap blade is turning into the position FAILURE. Fault function is indicated by a report "FAILURE".

Tab. 3.1.2. Communication and Control Device BKS 24-9A

Communication and Control Device	BKS 24-9A
Nominal voltage	AC 24 V 50/60Hz
Power consumption	3,5 W (operating position)
Dimensioning	5,5 VA
Protection Class	III (safe small voltage)
Degree of protection	IP 30
Ambient Temperature	0 … + 50 °C
Connection	Terminals for conductor 2 x 1,5 mm²

Fig. 7 Communication and Control Device BKS 24-9A

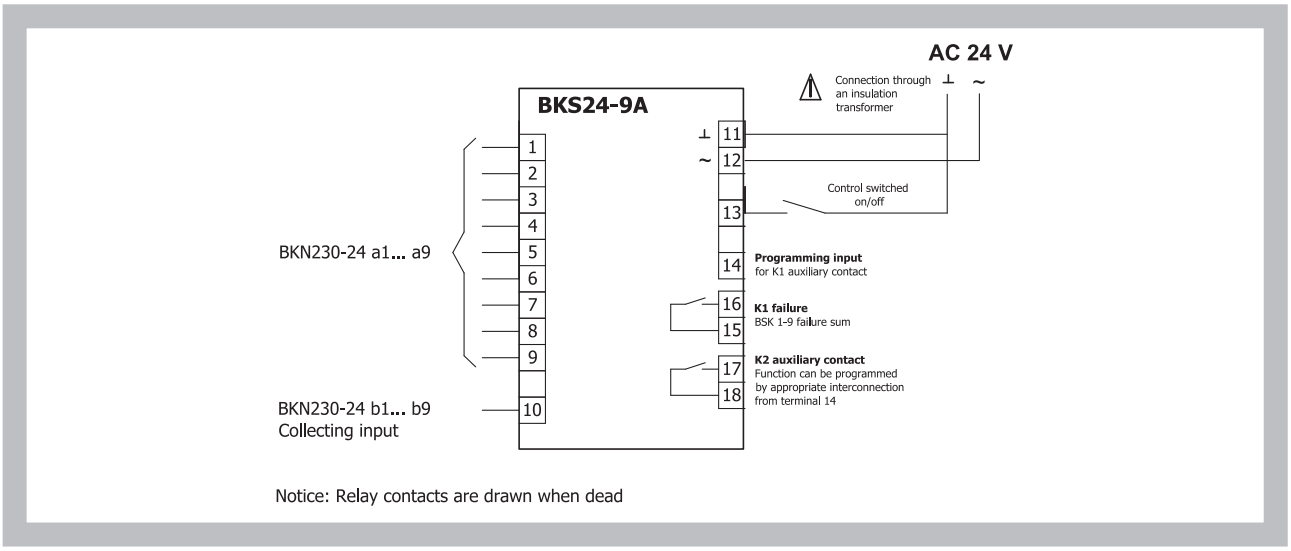

3.2. BKS 24-1B communication and control device is used for control and checks of fire dampers with the BFL 24-T-ST actuating mechanism in conjunction with the BKN 230-24 supply and communication device. BKS 24-1B receives information about the situation of the fire damper through the BKN 230-24 supply and communication device and issues controlling commands. The device is intended for building in into the distribution board. Light diodes on the front side of the device indicates the operating situations of the damper and breakdowns of the whole system. Nonpotential auxiliary contacts enable connection to the master control system (indication of the damper position, failure reports, release of the ventilators etc.).

While a flashing green LED pilot light signalises flap blade motion towards the given position, the same pilot light reports reaching the required position when shining constantly. If the damper, with respect to the given time, does not reach the required position, then a red LED pilot light starts to flash and at the same time, the failure contact is active. Once the damper blade reaches the given position, this contact is deactivated. The LED pilot light keeps flashing unless the failure is unblocked by means of the RESET button.

Tab. 3.2.1. Communication and Control Device BKS 24-1B

Communication and Control Device	**BKS 24-1B**
Nominal voltage	AC 24 V 50/60Hz
Power consumption	2,5 W (operating position)
Dimensioning	5 VA
Protection Class	III (safe small voltage)
Degree of protection	IP 30
Ambient Temperature	0 … + 50 °C
Connection	Into ZSO-11 connector which is not a part of BKS 24-1B. ZSO-11 connector has screw terminals 11 x 1,5 mm²

Fig. 8 Communication and control device BKS 24-1B

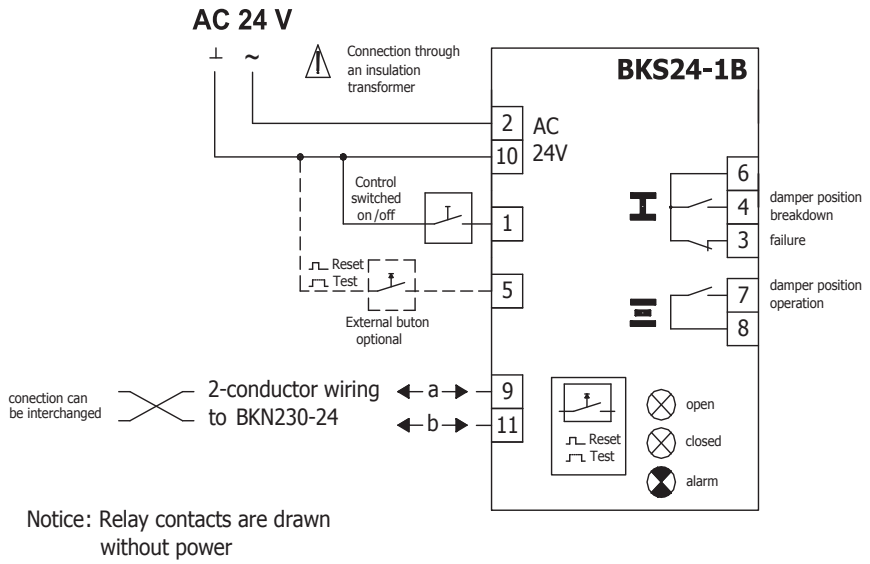

Signals and diagnosis				
light diodes			contacts	Description
open	closed	alarm	state	Cause/Course
closed	closed	closed	6–3	**Power supply AC 24V** not available
open	open	open	6–3	**Check test cca 35sec**, starting with switching AC 24 on or pressing «Reset/Test» button
closed	closed	flashing	6–3	**Current failure,** possible cause: • short circuit or interruption of 2-conductor wiring or damper failure (at BKN..) • Power supply AC 230V missing • defective thermoelectrical starting • smoke detector activated • exceeded operation time • damper blocked
closed	closed	open	6–3	**Failure saved in memory** • Fault in system signalled, system check should be done
closed	flashing	closed	6–4	Damper (drive) turning into **the direction** of breakdown position
closed	open	closed	6–4	Damper (drive) in **breakdown position** I
flashing	closed	closed	6–7	Damper (drive) turning into **the direction** of operating position
open	closed	closed	6–7	Damper (drive) in **operating position** II

4. Dimensions, weights

4.1. Dimensions

Fig. 9 Fire damper FDMC, design with actuating mechanism

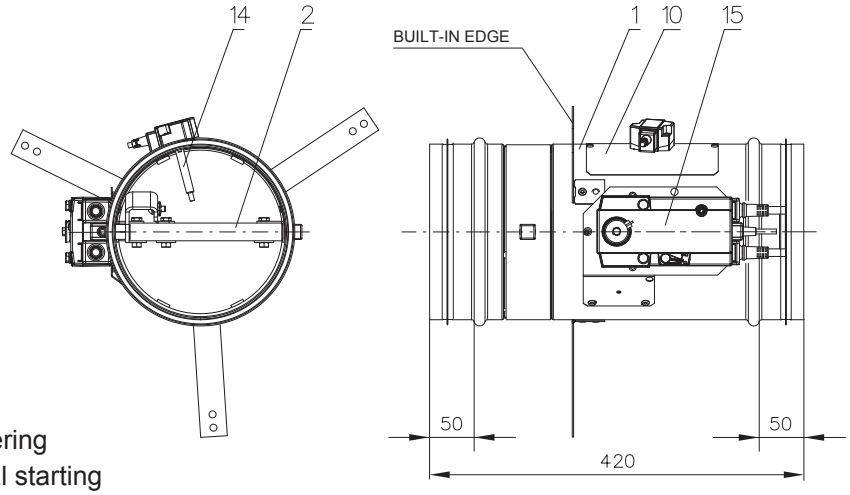

Position:

1 Damper casing
2 Damper blade
10 Inspection hole covering
14 BAT thermoelectrical starting mechanism
15 Actuating mechanism

4.2. Weight and effective area

Tab. 4.2.1. Weight and effective area

Size ⌀D	a	Weight	Effective area S_{ef} [m] ²	Actuating mechanism
100	-	3,1	0,0036	BFL
125	-	3,4	0,0068	BFL
140	-	3,6	0,0092	BFL
150	-	3,7	0,0109	BFL
160	-	3,8	0,0129	BFL
180	-	4,1	0,0172	BFL
200	-	4,4	0,0222	BFL
225	-	4,7	0,0293	BFL
250	9	5,5	0,0374	BFL
280	24	6,0	0,0484	BFL
315	41,5	6,6	0,0630	BFL
350	59	7,0	0,0793	BFL
355	61,5	7,3	0,0821	BFL
400	84	8,2	0,1065	BFL

4.3. Blades overlaps

Tab. 4.3.1 Blades overlaps

Blades overlaps		Dimension	Overlaps
FDMC Fig. 10	Side without act. mechanism	"a"	Tab. 4.2.1

These values has to be respected when projecting related air-conditioning ducts.

Fig. 10 Blades overlaps

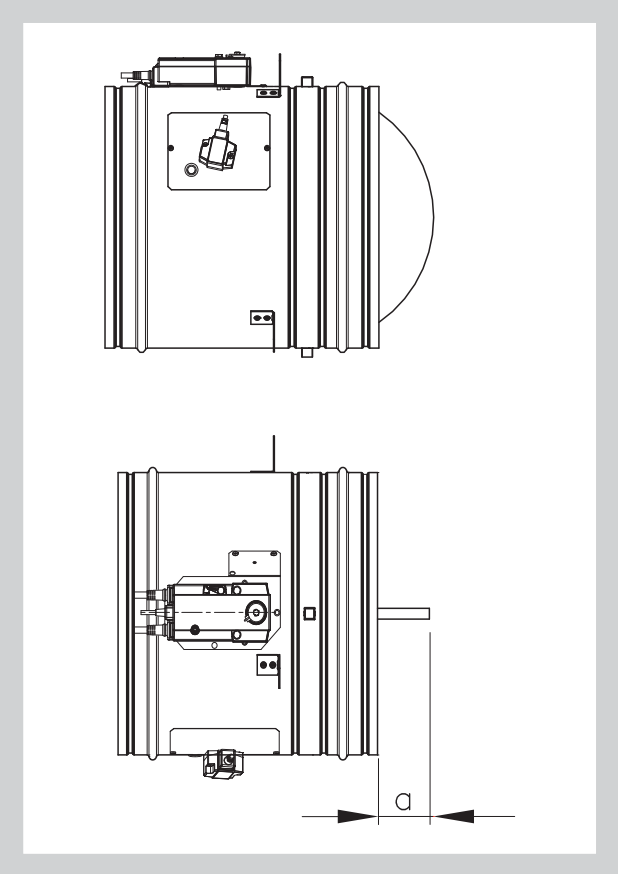

5. Placement and Assembly

5.1. Fire dampers are suitable for installation in arbitrary position in vertical and horizontal passages of fire separating constructions. Damper assembly procedures must be done so as all load transfer from the fire separating constructions to the damper body is absolutely excluded. Back-to-back air-conditioning piping must be hung or supported so as all load transfer from the back-to-back piping to the damper is absolutely excluded. Installation gap must be filled by approved material perfectly in all the installation space volume (installation gap).

To provide needed access space to the control device, all other objects must be situated at least 350 mm from the control parts of the damper. Inspection hole must be accessible.

Damper blade has to be inside of construction (labelled with BUILD IN EDGE on the damper body) after installation. The fire damper can also be installed outside the wall construction. Duct and the damper part between the wall construction and the damper blade (labelled with BUILD IN EDGE on the protective covering) must be protected with firefighting insulation (see fig. 12).

The distance between the fire damper and the construction (wall, ceiling) must be minimal in range from 10 to 50 mm. In case that two or more dampers are supposed to be installed in one fire separating construction, the distance between the adjacent dampers must be at least 50 mm.

Exceptions are given in chapter 6.

Fig. 11 The distance between the fire damper and the construction

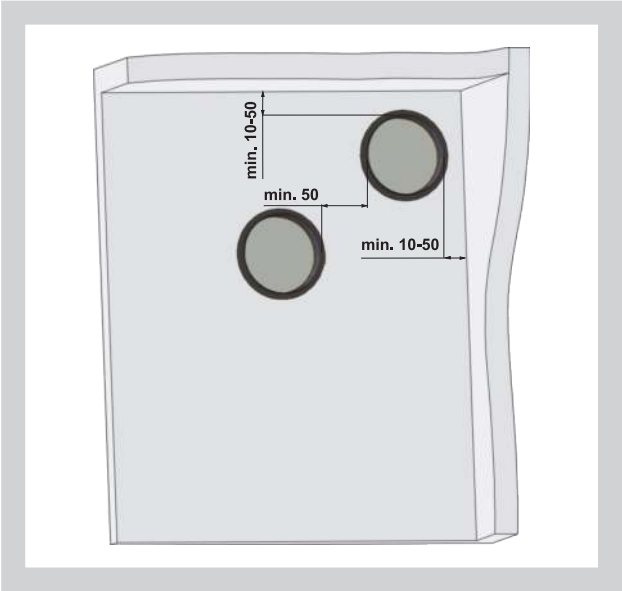

Fig. 12 Built-in edge - design with outer mechanical control or actuating mechanism

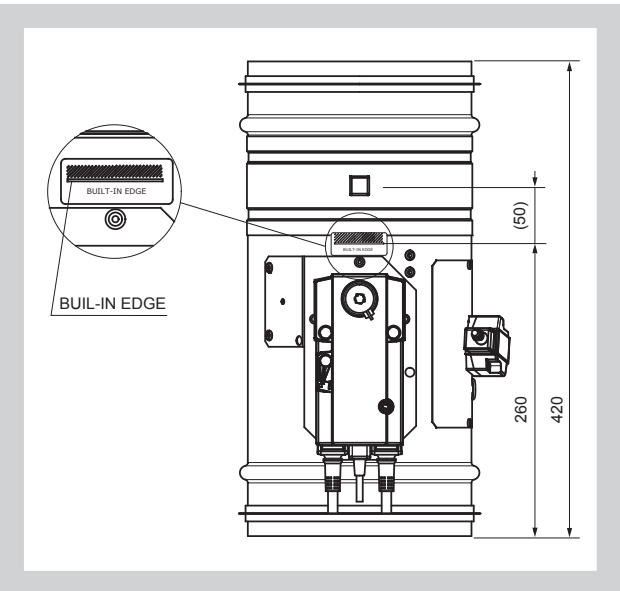

5.2. The control mechanism has to be protected (covered) against damage and pollution during installation process. All fire dampers has to be closed during installation process. The damper body should not be deformed in the course of bricking in. Once the damper is built in, its blade should not grind on the damper body during opening or closing.

5.3. Installation opening dimensions (see Fig. 13-14)

Fig. 13 Installation opening

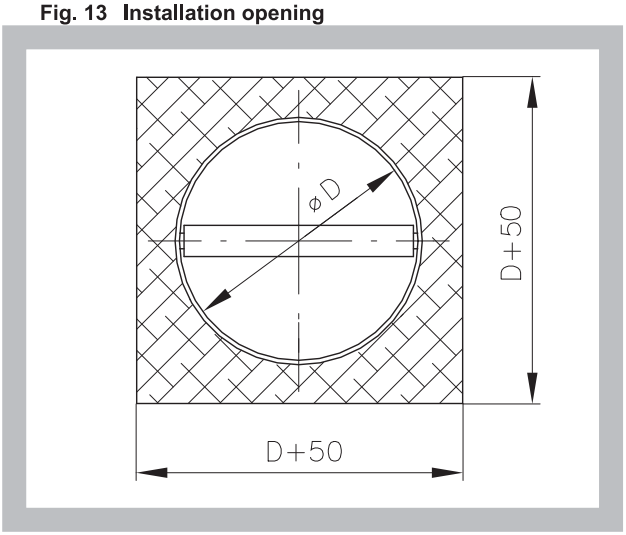

Fig. 14 Installation opening

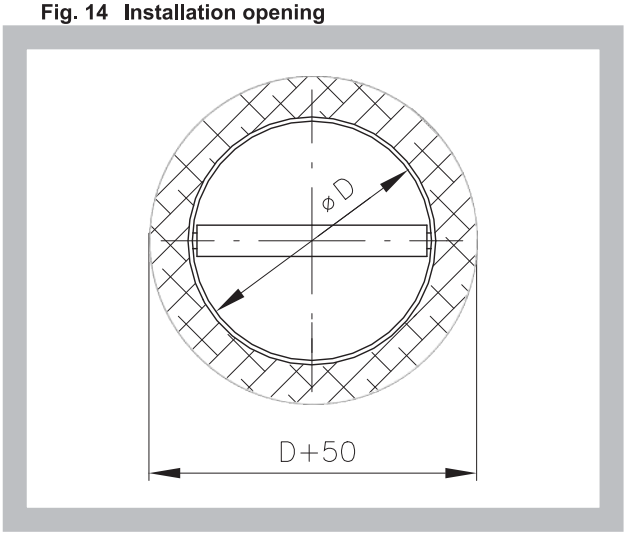

5.4. The control mechanism has to be protected (covered) against damage and pollution during installation process.

All fire dampers has to be closed during installation process. The damper body should not be deformed in the course of bricking in. Once the damper is built in, its blade should not grind on the damper body during opening or closing.

6. Statement of installations

6.1. Statement of installations the fire dampers FDMC and their fire resistance Tab. 6.1.1.

Tab. 6.1.1. Statement of installations

Construction	Installation	Material of stuffing box	Figure
Solid wall construction	Wet	Mortar or gypsum	15
	Wet, installation next to wall, ceiling	Mortar or gypsum	17
	Dry	Stuffing box and fire protection mastic	16
Solid ceiling construction	Mokré	Mortar or gypsum	18
	Dry	Stuffing box and fire protection mastic	19
Gypsum wall construction	Wet	Mortar or gypsum	20
	Wet, installation next to wall, ceiling	Mortar or gypsum	22
	Dry	Stuffing box and fire protection mastic	21

Fig. 15 Solid wall construction - mortar or gypsum

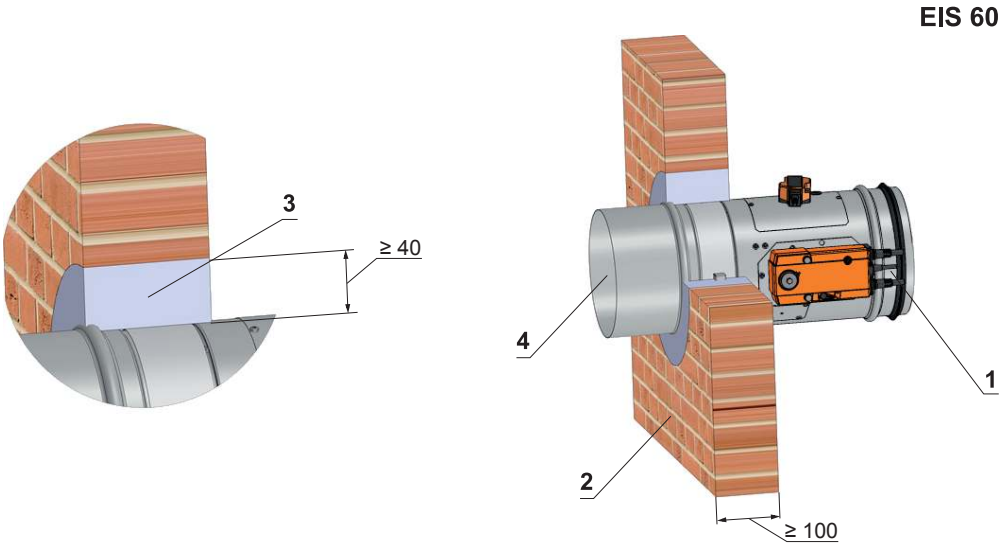

POSITION:

1 Fire damper FDMC

2 Solid wall construction

3 Mortar or gypsum

4 Duct

Fig. 16 Solid wall construction - stuffing box and fire protection mastic

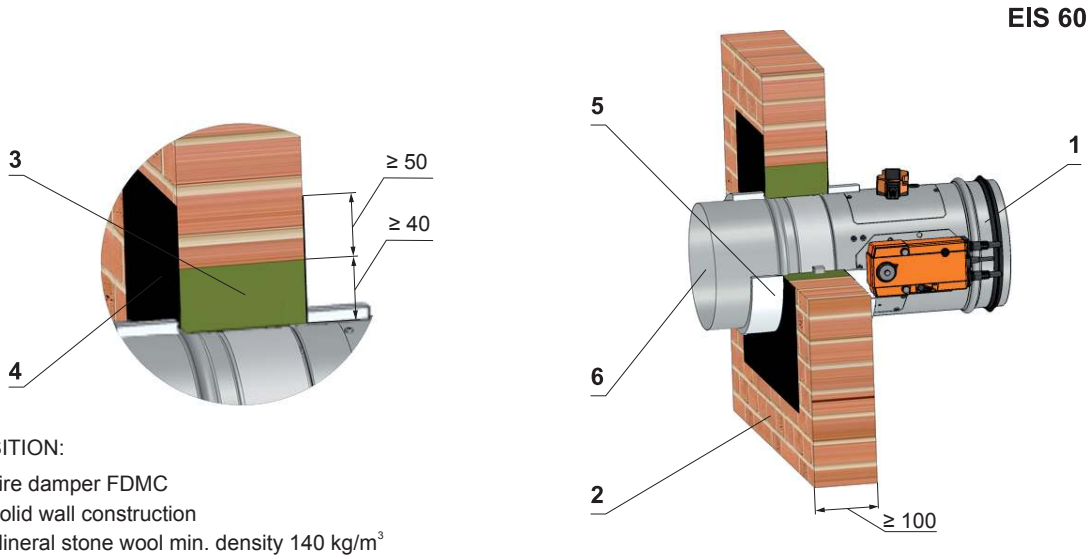

POSITION:

1 Fire damper FDMC
2 Solid wall construction
3 Mineral stone wool min. density 140 kg/m^3
4 Fire protection mastic min. thickness 1 mm
5 Glass fiber felt with aluminium foil width 50 mm, thickness 5 mm
6 Duct

Used materials - example*:

3 - Promapyr, Rockwool Steprock HD
4 - Promastop - P, K

* Stuffing box and fire protection mastic can be replaced by another approved fire sealing system for damper installation with equivalent material properties.

Fig. 17 Solid wall construction - installation next to wall, ceiling - mortar or gypsum and mineral wool

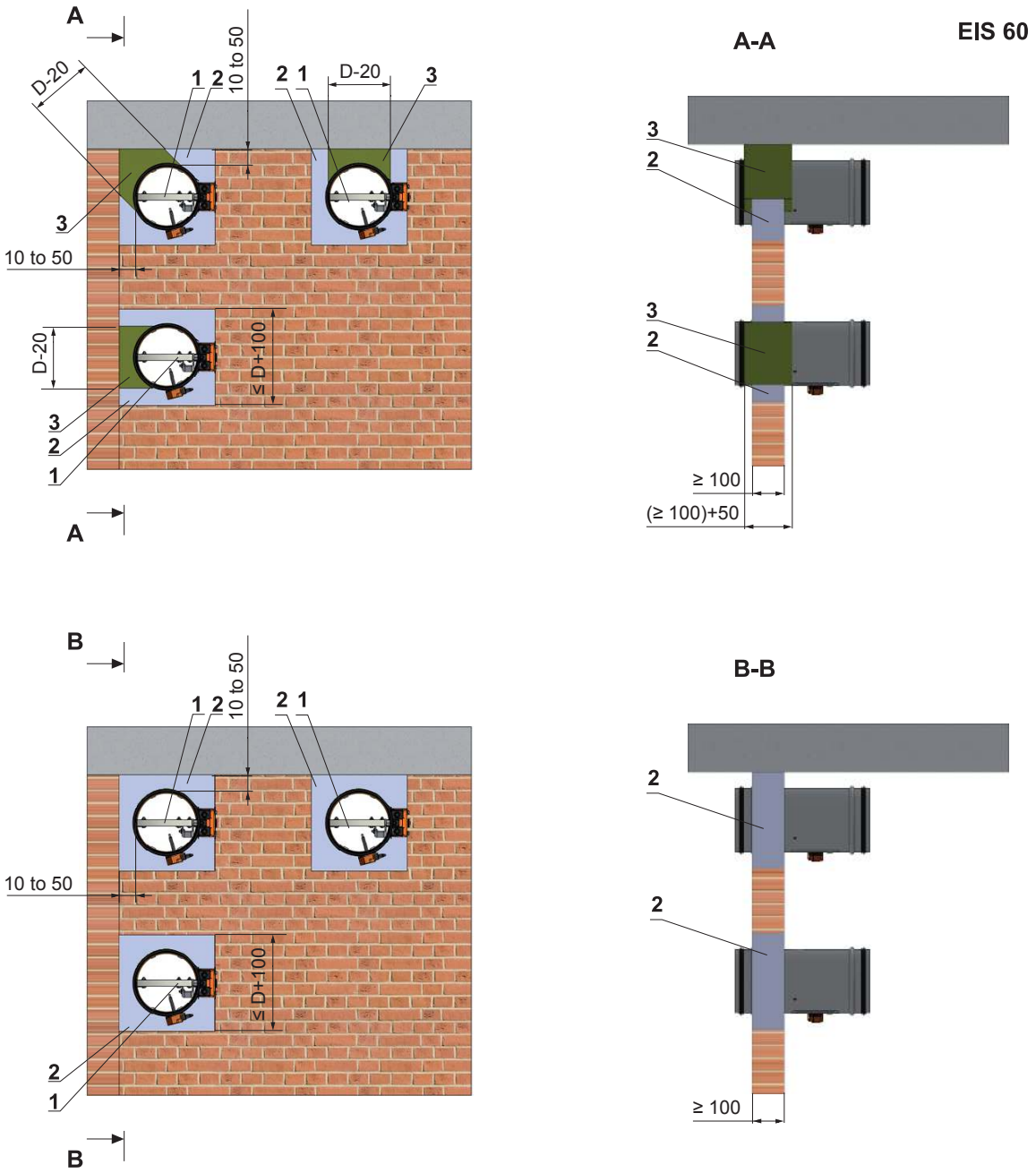

POSITION:

1 Fire damper FDMC
2 Mortar or gypsum
3 Mineral stone wool min. density 140 kg/m³

Notice:

- Gap between damper and construction is filled by mortar or gypsum and mineral wool
- Wool is fixed to damper body and construction by fire protection mastic.
- Mineral wool thickness = construction thickness + 50 mm
- Installation is valid for ceiling construction

Fig. 18 Solid ceiling construction - mortar or gypsum

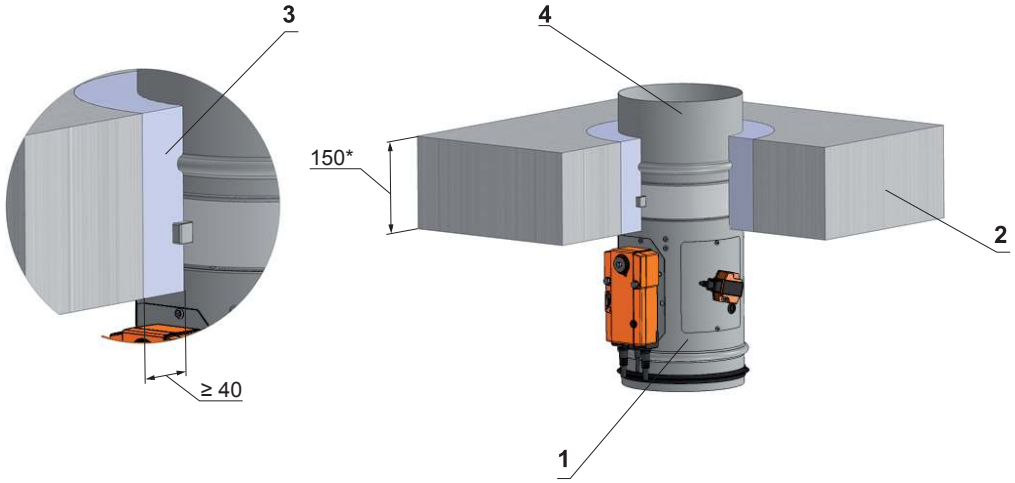

POSITION:

1 Fire damper FDMC
2 Solid ceiling construction
3 Mortar or gypsum
4 Duct

* min. 110 - Concrete/ min. 125 - Aerated concrete

Fig. 19 Solid ceiling construction - stuffing box and fire protection mastic

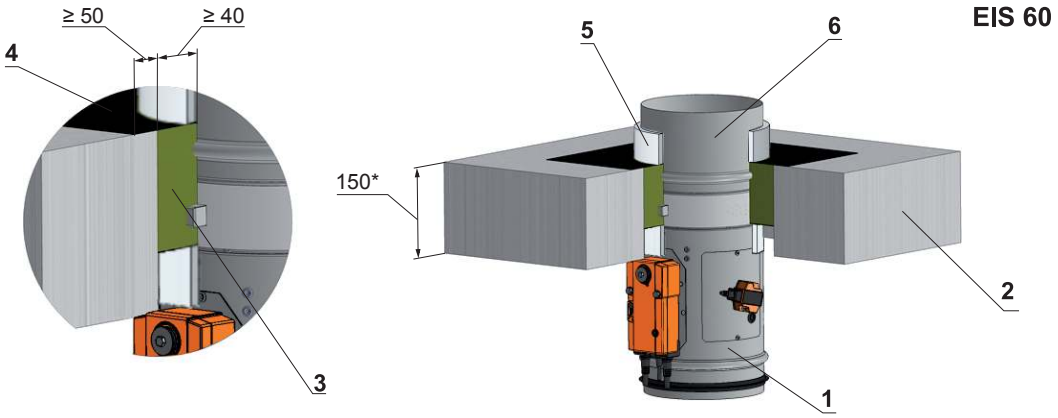

POSITION:

1 Fire damper FDMC
2 Solid ceiling construction
3 Mineral stone wool min. density 140 kg/m^3
4 Fire protection mastic min. thickness 1 mm
5 Glass fiber felt with aluminium foil width 50 mm, thickness 5 mm
6 Duct

* min. 110 - Concrete/ min. 125 - Aerated concrete

Used materials - example**:

2 - Promapyr, Rockwool Steprock HD
3 - Promastop - P, K

** Stuffing box and fire protection mastic can be replaced by another approved fire sealing system for damper installation with equivalent material properties.

Fig. 20 Gypsum wall construction - mortar or gypsum

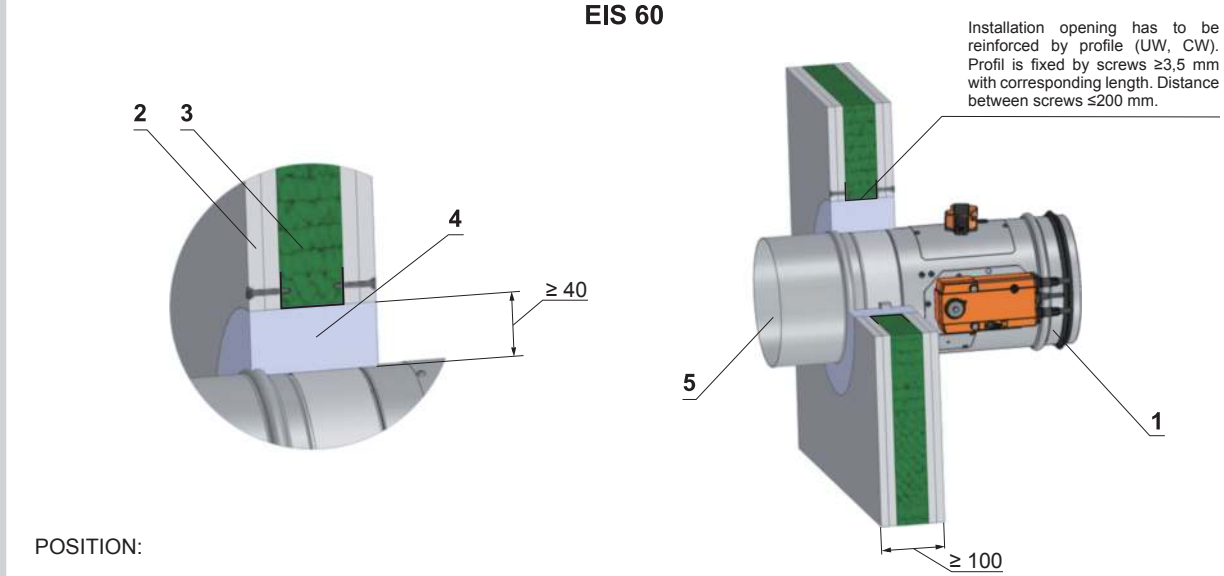

POSITION:

1 Fire damper FDMC

2 Gypsum plate

3 Fire resistant insulation

4 Mortar or gypsum

5 Duct

Fig. 21 Gypsum wall construction - stuffing box and fire protection mastic

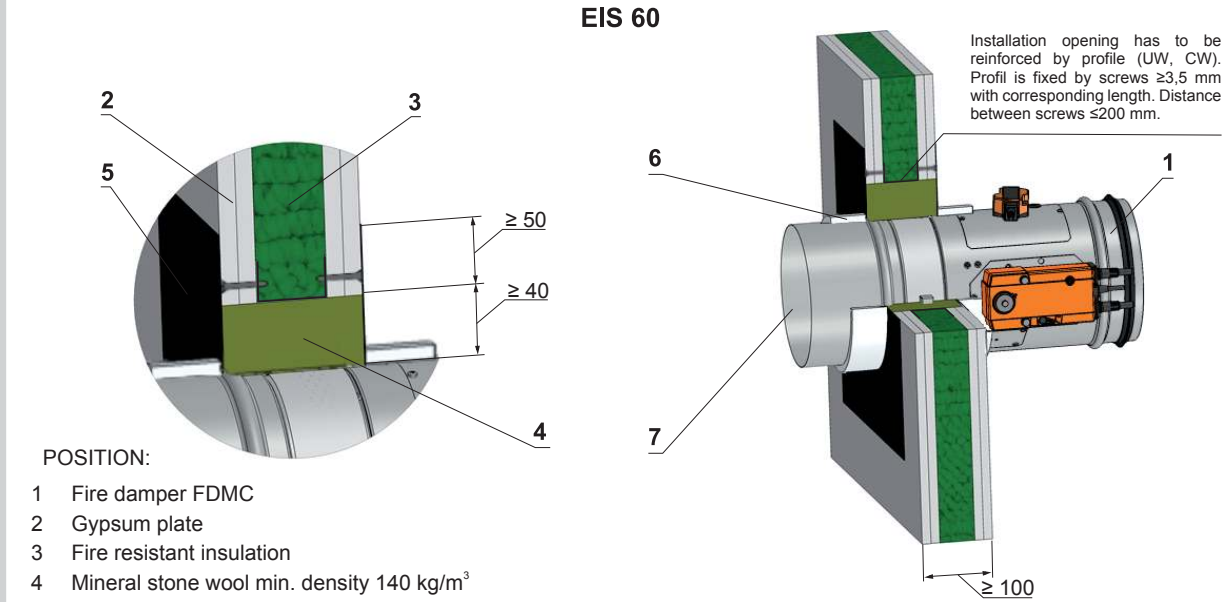

POSITION:

1 Fire damper FDMC

2 Gypsum plate

3 Fire resistant insulation

4 Mineral stone wool min. density 140 kg/m^3

5 Fire protection mastic min. thickness 1 mm

6 Glass fiber felt with aluminium foil width 50 mm, thickness 5 mm

7 Duct

Used materials - example*:

4 - Promapyr, Rockwool Steprock HD

5 - Promastop - P, K

* Stuffing box and fire protection mastic can be replaced by another approved fire sealing system for damper installation with equivalent material properties.

Fig.. 22 Gypsum wall construction - installation next to wall, ceiling - mortar or gypsum and mineral wool

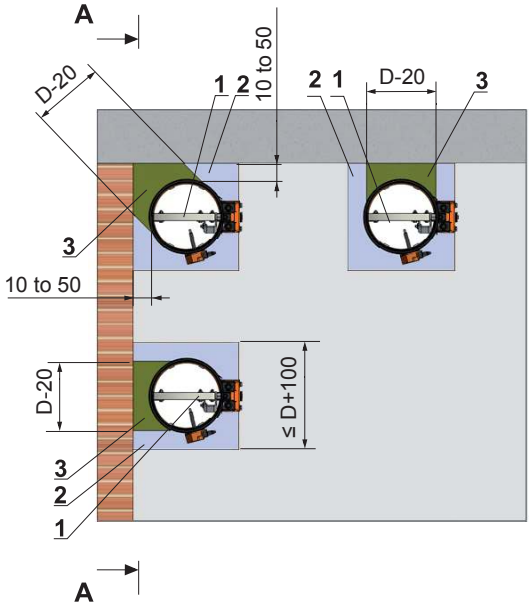

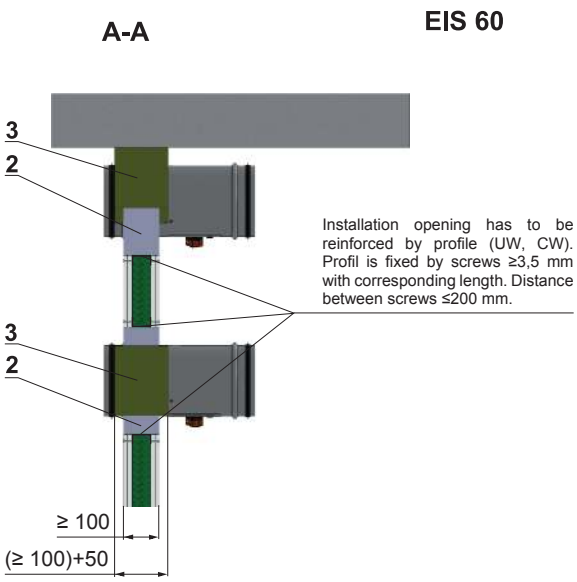

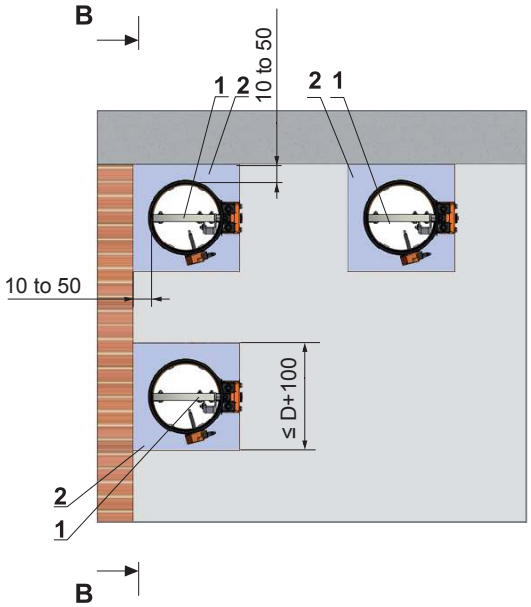

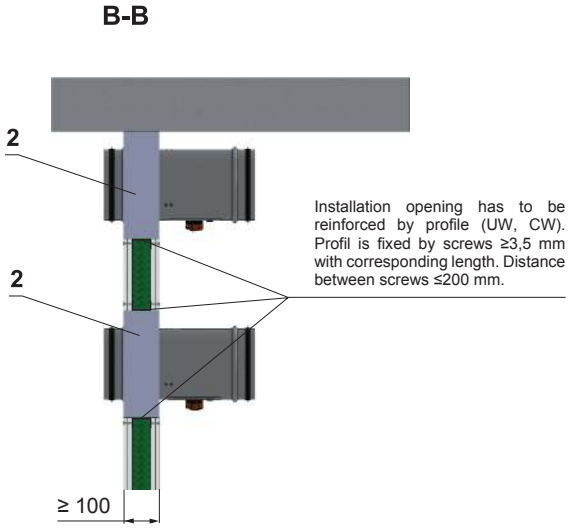

POSITION:

1 Fire damper FDMC
2 Mortar or gypsum
3 Mineral stone wool min. density 140 kg/m³

Notice:

- Gap between damper and construction is filled by mortar or gypsum and mineral wool
- Wool is fixed to damper body and construction by fire protection mastic.
- Mineral wool thickness = construction thickness + 50 mm
- Installation is valid for ceiling construction

7. Suspension systems

7.1. Mounting to the ceiling wall

Fig. 23 Mounting to the ceiling wall

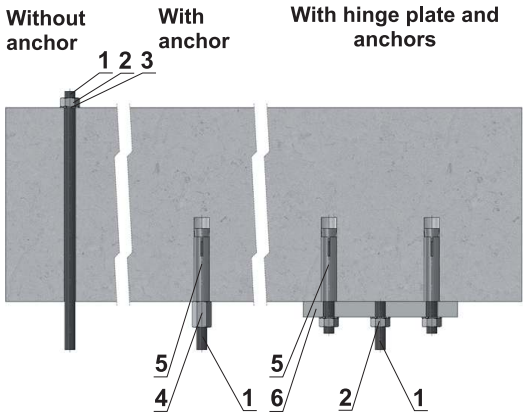

Hinge plates

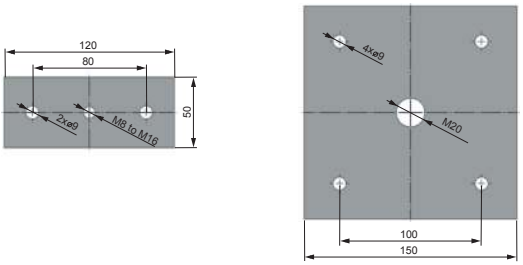

Position:

1 Threaded rod M8 – M20
2 Nut
3 Washer
4 Coupling Nut
5 Anchor
6 Hinge plate - min. thickness 10 mm

Load capacities of threaded hanger rods F [N] at the required fire resistance 90 minutes

Size	A_s [mm^2]	Weight G [kg]	
		for 1 piece	for 1 pair
M8	36,6	22	44
M10	58,0	35	70
M12	843	52	104
M14	115	70	140
M16	157	96	192
M18	192	117	234
M20	245	150	300

7.2. Horizontal installation

Fire dampers can be suspended by using threaded rods and a mounting profiles. Load the suspension system depend on weight of the fire damper.

Damper assembly procedures must be done so as all load transfer from the fire separating constructions to the damper body is absolutely excluded. Back-to-back air-conditioning piping must be hung or supported so as all load transfer from the back-to-back piping to the damper is absolutely excluded.

Threaded rods longer than 1,5 m require fire-resistant insulation.

Threaded rod fixing to the ceiling construction - see fig. 23

Fig. 24 Suspension - horizontal duct

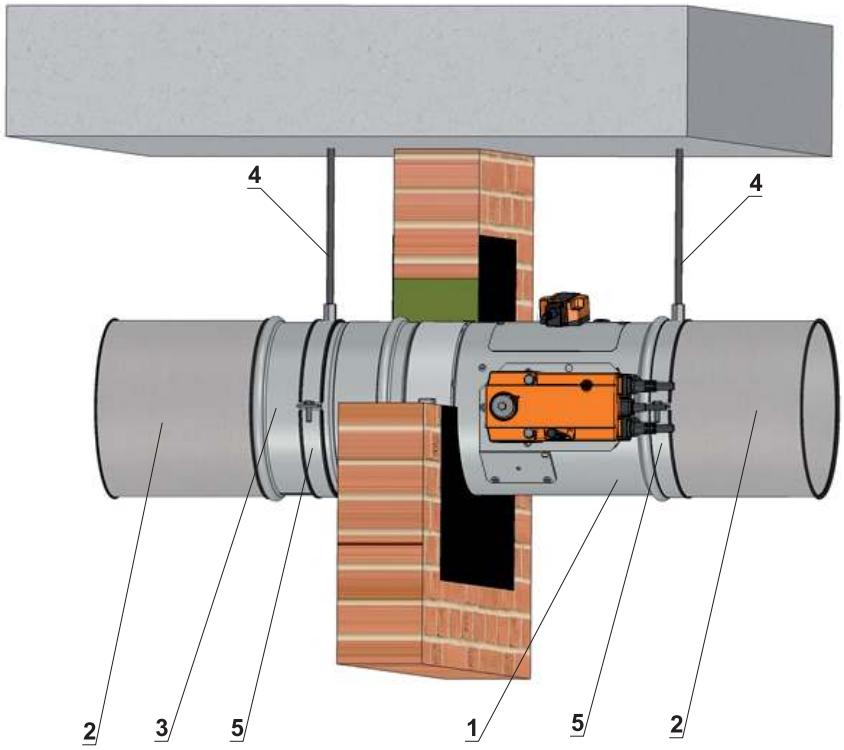

Position:

1 Fire damper
2 Damping pad
3 Extension piece
4 Threaded rod
5 Suspension ring

Examples of using materials: **HILTI, SIKLA, MÜPRO etc.**

7.3. Vertical installation

Fire dampers can be suspended by using threaded rods and a mounting profiles.
Load the suspension system depend on weight of the fire damper.

Damper can be suspended from the ceiling construction or supported above the ceiling construction. Damper assembly procedures must be done so as all load transfer from the fire separating constructions to the damper body is absolutely excluded. Back-to-back air-conditioning piping must be hung or supported so as all load transfer from the back-to-back piping to the damper is absolutely excluded.

Threaded rods longer than 1,5 m require fire-resistant insulation.

Fig. 25 Suspension - vertical duct

Actuating mechanism is placed above the ceiling construction

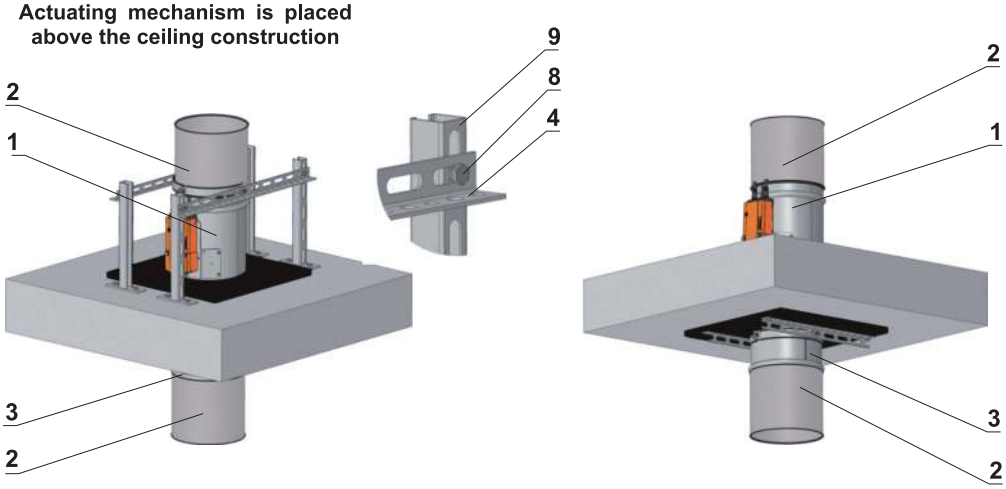

Actuating mechanism is placed under the ceiling construction

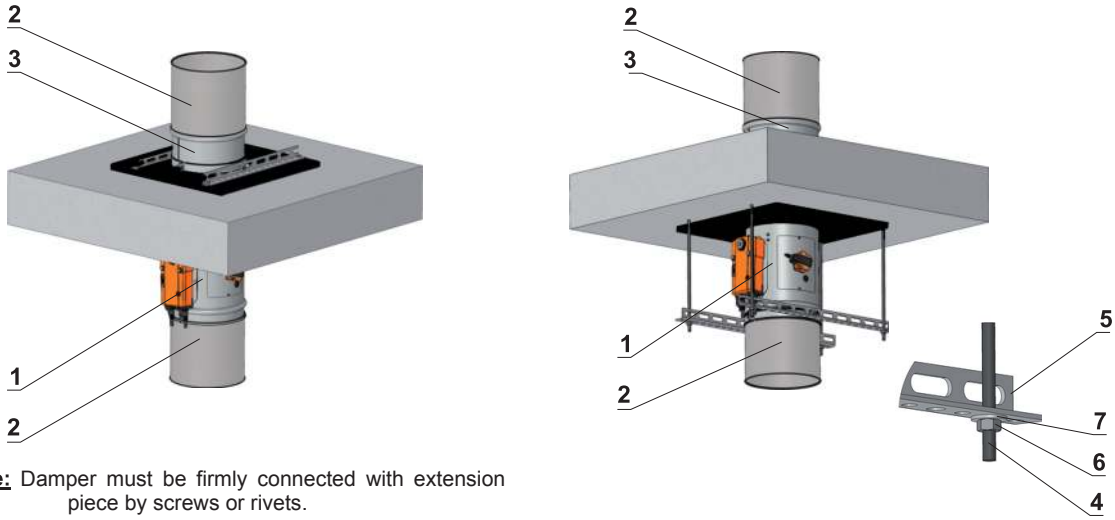

Notice: Damper must be firmly connected with extension piece by screws or rivets.

Suspension ring and mounting rail connected by bolt

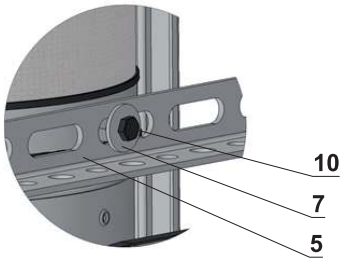

Suspension ring and mounting rail connected by screw or rivet

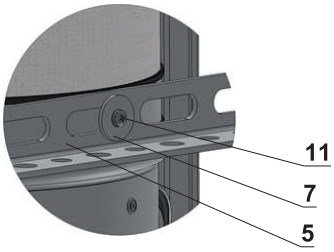

Position:

1	Fire damper
2	Damping pad
3	Extension piece
4	Threaded rod
5	Mounting rail
6	Nut
7	Washer
8	Screw connection
9	Mounting profile
10	Bolt
11	Screw or rivet

III. TECHNICAL DATA

8. Pressure loss

8.1. Pressure loss calculation

$$\Delta p = \xi \cdot \rho \cdot \frac{w^2}{2}$$

Δp	[Pa]	presure loss
w	[m.s^{-1}]	air flow speed in nominal damper section
ρ	[kg.m^{-3}]	air density
ξ	[-]	coefficient of local pressure loss for the nominal damper section (see Tab. 8.2.1.)

8.2. Determination of pressure loss by using diagram 8.2.1. ρ = 1,2 kg.m^{-3}

Diagram 8.2.1. Pressure losses for air density ρ =1,2 kg.m^{-3}

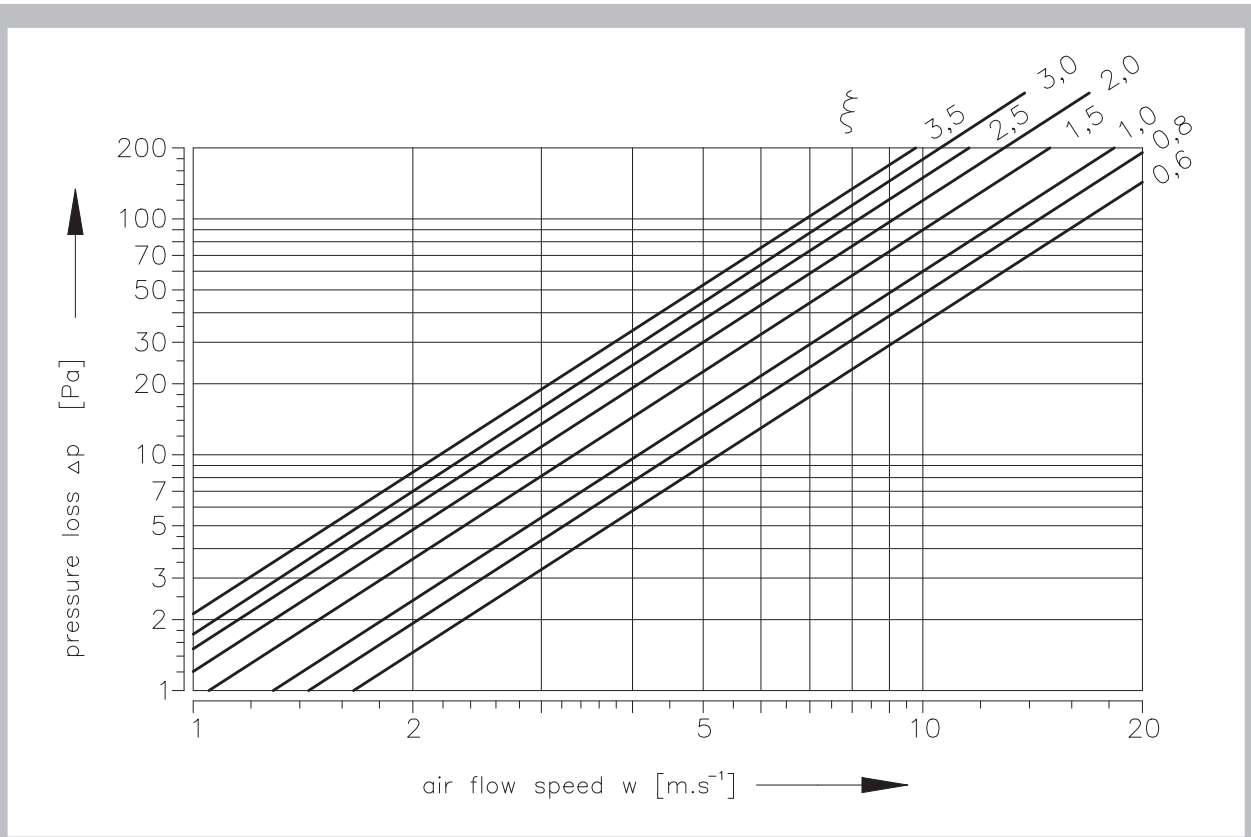

9. Coefficient of local pressure loss

9.1. Coefficient of local pressure loss ξ (-)

Tab. 9.1.1. Coefficient of local pressure loss

D	100	125	140	150	160	180	200	225	250	280	315	350	355	400
ξ	2,736	2,099	1,781	1,527	1,272	0,929	0,636	0,477	0,344	0,237	0,159	0,125	0,116	0,085

10. Noise data

10.1. Level of acoustic output corrected with filter A.

$$L_{WA} = L_{W1} + 10 \log(S) + K_A$$

L_{WA}	[dB(A)]	level of acoustic output corrected with filter A
L_{W1}	[dB]	level of acoustic output L_{W1} related to the 1 m² section (see Tab. 10.3.1.)
S	[m²]	duct cross section
K_A	[dB]	correction to the weight filter A (see Tab. 10.3.2.)

10.2. Level of acoustic output in octave ranges.

$$L_{Woct} = L_{W1} + 10 \log(S) + L_{rel}$$

L_{Woct}	[dB]	spectrum of acoustic output in octave range
L_{W1}	[dB]	level of acoustic output L_{W1} related to the 1 m² section (see Tab. 10.3.1.)
S	[m²]	duct cross section
L_{rel}	[dB]	relative level expressing the shape of the spectrum (see Tab. 10.3.3.)

10.3. Table of acoustics values

Tab. 10.3.1. Level of acoustic output L_{W1} related to the 1 m² section

	ξ [-]											
w [m.s⁻¹]	**0,1**	**0,2**	**0,3**	**0,4**	**0,6**	**0,8**	**1,0**	**1,5**	**2,0**	**2,5**	**3,0**	**3,5**
2	9,0	11,5	14,7	16,9	20,1	22,3	24,1	27,2	29,4	31,2	32,6	33,8
3	16,7	22,1	25,3	27,5	30,7	32,9	34,6	37,8	40,0	41,7	43,2	44,4
4	24,2	29,6	32,8	35,0	38,1	40,4	42,1	45,3	47,5	49,2	50,7	51,9
5	30,0	35,4	38,6	40,8	44,0	46,2	47,9	51,1	53,3	55,1	56,5	57,7
6	34,8	40,2	43,3	45,6	48,7	51,0	52,7	55,8	58,1	59,8	61,2	62,4
7	38,8	44,2	47,3	49,6	52,7	55,0	56,7	59,9	62,1	63,8	65,2	66,4
8	42,3	47,7	50,8	53,1	56,2	58,4	60,2	63,3	65,6	67,3	68,7	69,9
9	45,4	50,7	53,9	56,1	59,3	61,5	63,3	66,4	68,6	70,4	71,8	73,0
10	48,1	53,5	56,6	58,9	62,0	64,3	66,0	69,1	71,4	73,1	74,5	75,7
11	50,6	56,0	59,1	61,4	64,5	66,7	68,5	71,6	73,9	75,6	77,0	78,2
12	52,8	58,2	61,4	63,6	66,8	69,0	70,7	73,9	76,1	77,9	79,3	80,5

Tab. 10.3.2. Correction to the weight filter A

w [m.s⁻¹]	**2**	**3**	**4**	**5**	**6**	**7**	**8**	**9**	**10**	**11**	**12**
K_A [dB]	-15,0	-11,8	-9,8	-8,4	-7,3	-6,4	-5,7	-5,0	-4,5	-4,0	-3,6

Tab. 10.3.3. Relative level expressing the shape of the spectrum L_{rel}

	f [Hz]							
w [m.s^{-1}]	**63**	**125**	**250**	**500**	**1000**	**2000**	**4000**	**8000**
2	-4,5	-6,9	-10,9	-16,7	-24,1	-33,2	-43,9	-56,4
3	-3,9	-5,3	-8,4	-13,1	-19,5	-27,6	-37,4	-48,9
4	-3,9	-4,5	-6,9	-10,9	-16,7	-24,1	-33,2	-43,9
5	-4,0	-4,1	-5,9	-9,4	-14,6	-21,5	-30,0	-40,3
6	-4,2	-3,9	-5,3	-8,4	-13,1	-19,5	-27,6	-37,4
7	-4,5	-3,9	-4,9	-7,5	-11,9	-17,9	-25,7	-35,1
8	-4,9	-3,9	-4,5	-6,9	-10,9	-16,7	-24,1	-33,2
9	-5,2	-3,9	-4,3	-6,4	-10,1	-15,6	-22,7	-31,5
10	-5,5	-4,0	-4,1	-5,9	-9,4	-14,6	-21,5	-30,0
11	-5,9	-4,1	-4,0	-5,6	-8,9	-13,8	-20,4	-28,8
12	-6,2	-4,3	-3,9	-5,3	-8,4	-13,1	-19,5	-27,6

Fig. 26 Calculation example

Given data:	Fire damper FDMC 250
	$\dot{V}$ = 1000 m³.h
	ρ = 1,2 kg.m^{-3}
	Octave range 1000 Hz
Tab. 4.2.1.	S_{ef} = 0,0374 m²
Calculation:	w [m.s^{-1}] = ($\dot{V}$ [m³.h] / 3600) / S_{ef} [m²]
	w = 7,43 m.s^{-1}
Tab.9.1.1.	ξ = 0,344
Calculation:	$\Delta p = \xi . \rho . (w/2)$ = 0,344 . 1,2 . (7,43/2) = 11,4 Pa
Tab. 10.3.1., Tab. 10.3.2. a Tab. 10.3.3.	L_{W1} = 48,8 dB
	K_A = - 6,1 dB
	L_{rel} = -11,5 dB (pro 1000 Hz)
Calculation:	$L_{WA} = L_{W1} + 10 \log(S_{ef}) + K_A$ = 48,8 + 10 log(0,0374) - 6,1 = 28,5 dB
	$L_{Woct} = L_{W1} + 10 \log(S_{ef}) + L_{rel}$ = 48,8 + 10 log(0,0374) - 11,5 = 23,1 dB

IV. MATERIAL, FINISHING

11. Material

11.1. Damper bodies are supplied in the design made of galvanized plate without any other surface finishing.

Damper blades are made of fire resistant asbestos free boards made of mineral fibres.

Damper controls are made of galvanized materials with no other surface finish.

Fasteners is galvanized. Fasteners is galvanized.

11.2. According to the customer's requirements, damper body, control, springs and jointing material can be made of stainless material.

V. INSPECTION, TESTING

12. Inspection, testing

12.1. The appliance is constructed and preset by the manufacturer, its operation is dependent on proper installation and adjustment.

VI. TRANSPORTATION AND STORAGE

13. Logistic terms

13.1. Dampers are transported by box freight vehicles without direct weather impact, there must not occur any sharp shocks and ambient temperature must not exceed + 40 °C. Dampers must be protected against mechanic damages when transported and manipulated. During transportation, the damper blade must be in the "CLOSED" position.

13.2. Dampers are stored indoor in environment without any aggressive vapours, gases or dust. Indoor temperature must be in the range from -30 °C to +40 °C and maximum relative humidity 95 % (avoid condensation on the damper body). Dampers must be protected against mechanic damages when transported and manipulated.

VII. ASSEMBLY, ATTENDANCE, MAINTENANCE AND REVISIONS

14. Assembly

14.1. Assembly, maintenance and damper function check can be done only by qualified and trained person, i.e. “AUTHORIZED PERSON” according to the manufacturer documentation. All works done on the fire dampers must be done according international and local norms and laws.

14.2. All effective safety standards and directives must be observed during fire damper assembly.

14.3. To ensure reliable fire damper function it is necessary to avoid blocking the closing mechanism and contact surfaces with collected dust, fibre and sticky materials and solvents.

15. Entry into service and revisions

15.1. Before entering the dampers into operation after their assembly and by sequential checks, the following checks must be carried out.

Visual inspection of proper damper integration, inside damper area, damper blade, contact surfaces and silicon sealing.

Inspection hole disassembly: release the covering lid by removing the two screws in the corners of inspection hole. Then remove lid from its original position.

Check of blade displacement into the breakdown position "CLOSED" can be done after cutting off the actuating mechanism supply (e.g. by pressing the RESET button at the thermoelectrical starting mechanism BAT72B-S or cutting off the supply from ELECTRICAL FIRE SIGNALISATION). Check of blade displacement back into the "OPEN" position can be done after restoration of power supply (e.g. By releasing the RESET button or restoration of supply from ELECTRICAL FIRE SIGNALISATION).

15.2. Dampers could be displaced into position “CLOSED” only in case that ventilator, or Air Handling Unit is switched off. The goal is the securing of proper closing and safe function of Fire Damper in case of Fire.

15.3. Manual operation

Without power supply, the damper can be operated manually and fixed in any required position. Release of the locking mechanism can be achieved manually or automatically by applying the supply voltage.

15.4. It is recommended to provide periodical checks, maintenance and service actions on Fire Equipment by Authorized persons schooled by Producer.

15.5. All effective safety standards and directives must be observed during fire damper assembly.

VIII. DATA OF THE PRODUCT

16. Data label

16.1. Data label is placed on the casing of fire damper.

Fig. 27 Data label

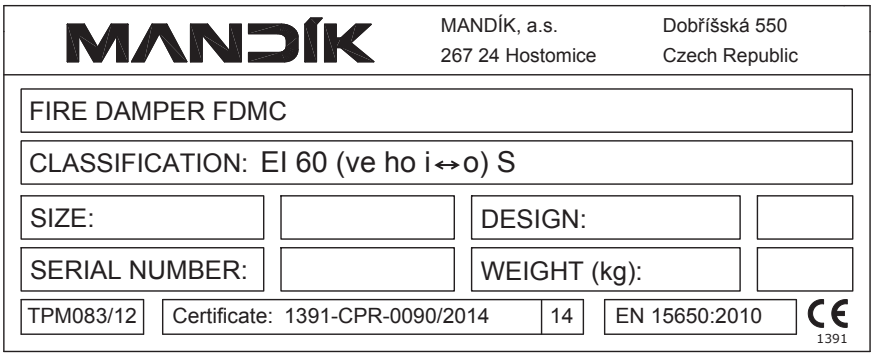

17. Quick review

Tab. 17.1.1. Quick review

Damper	**FDMC**			
Size			**⌀ 100 - 400**	
Fire separating construction	**Wall/Ceiling Min. thickness [mm]**	**Installation**	**Fire resistance**	**Fig.**
Solid wall construction	100	Mortar or gypsum	EIS 60	16
	100	Stuffing box with fire protection mastic	EIS 60	17
Gypsum wall construction	100	Mortar or gypsum	EIS 60	18
	100	Stuffing box with fire protection mastic	EIS 60	19
Solid ceiling construction	150	Mortar or gypsum	EIS 60	20
	150	Stuffing box with fire protection mastic	EIS 60	21

IX. ORDERING INFORMATION

18. Ordering key

FDMC S 180 - .40 TPM 083/12

- TPM 083/12 — technical specifications
- .40 — design acc. Tab. 18.1.1.
- 180 — size
- S — S - Spiro damper
- S — SL - Spiro damper with rubber sealing (Lip Seal)
- FDMC — type

If are requested installation holders it has to be mentioned separately in the order.

Tab. 18.1.1. Dampers design

Dampers design	Additional digit
With actuating mechanism BFL 230-T	.40
With actuating mechanism BFL 24-T	.50
With communication and supply device BKN 230-24 and actuating mechanism BFL 24-T-ST*	.60

*** communication and supply device BKN 230-24 has to be placed near the damper. It is necessary for easy connection of actuating system equipped by BKN 230-24 device.**

MANDÍK®

DISC VALVE

TVPM - TVOM

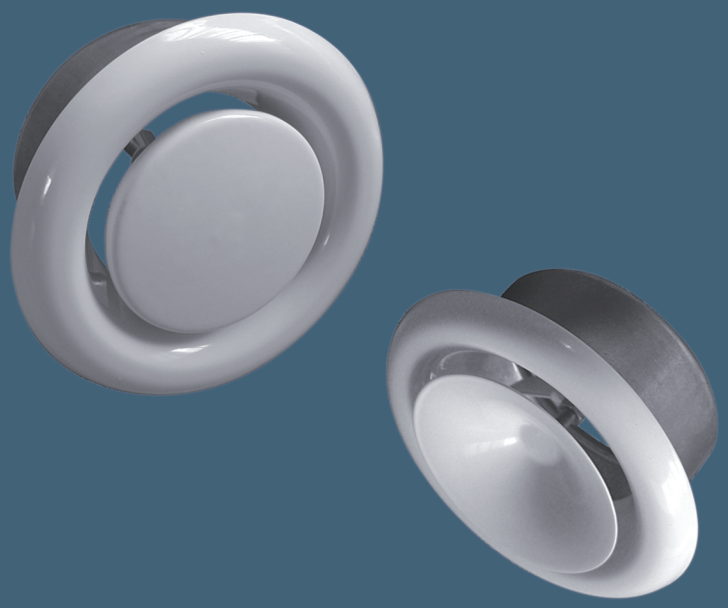

These technical specifications state a row of manufactured sizes and models of disk valves (further only valves) TVOM, TVPM. It is valid for manufacture, designing, ordering, delivery, assembly and operation.

I. CONTENT

II. GENERAL INFORMATION **3**

1. Description..... 3

2. Design..... 3

3. Dimensions, weights..... 3

4. Placement and Assembly..... 5

III. TECHNICAL DATA **5**

5. Basic parameters..... 5

IV. ORDERING INFORMATION **7**

6. Ordering key..... 7

V. MATERIAL **8**

7. Material..... 8

VI. INSPECTION, TESTING **8**

8. Inspection, testing..... 8

VII. TRANSPORTATION AND STORAGE **8**

9. Logistic terms..... 8

VIII. ASSEMBLY, ATTENDANCE, MAINTENANCE AND REVISIONS **8**

10. Assembly..... 8

II. GENERAL INFORMATION

1. Description

1.1. Valves are end parts of ventilation or air conditioning systems.Valves TVPM are intended for air supply and TVOM are intended for air outlet. Amount of supplied or outlet air could be regulated by rotating disc of valve body. After taking out the valve body from the casing, the set upped position "s" is ensured by means of the check nut, and the valve can again be set into the casing. The bodies of the valves are set in casing and secured by bayonet closures.

1.2. Valves are designed for macroclimatic areas with mild climate according to EN 60 721-3-3.

1.3. Nozzles are suitable for systems without abrasive, chemical and adhesive particles.

1.4. If is not noticed other way, all dimensions and weight are in millimeters and kilograms.

2. Design

2.1. Valves can be delivered in the following versions:

- for air supply - TVPM
- for air outlet - TVOM

Fig. 1

3. Dimensions, weights

3.1. Valve dimensions and weights

Tab. 3.1.1. Dimensions and weights

Size	øD	øD_1	ød_1	ødp	ødo	L	L_1	Set upped possition with		Weight [kg]	
								TVPM	TVOM	TVPM	TVOM
80	115	105	79	80	60	42	50	9 to -3	12 to -15	0,150	0,125
100	138	125	99	93	75	40	50	10 to -3	10 to -10	0,190	0,170
125	164	150	124	115	99	46	50	15 to -7	9 to -17	0,270	0,230
150	202	175	149	135	118	50	50	15 to -5	10 to -15	0,390	0,350
160	211	185	159	148	129	54	50	15 to -10	5 to -20	0,420	0,380
200	248	225	199	196	157	63	50	20 to -3	20 to -25	0,590	0,510

3.2. Valve for air supply - TVPM

Fig. 2

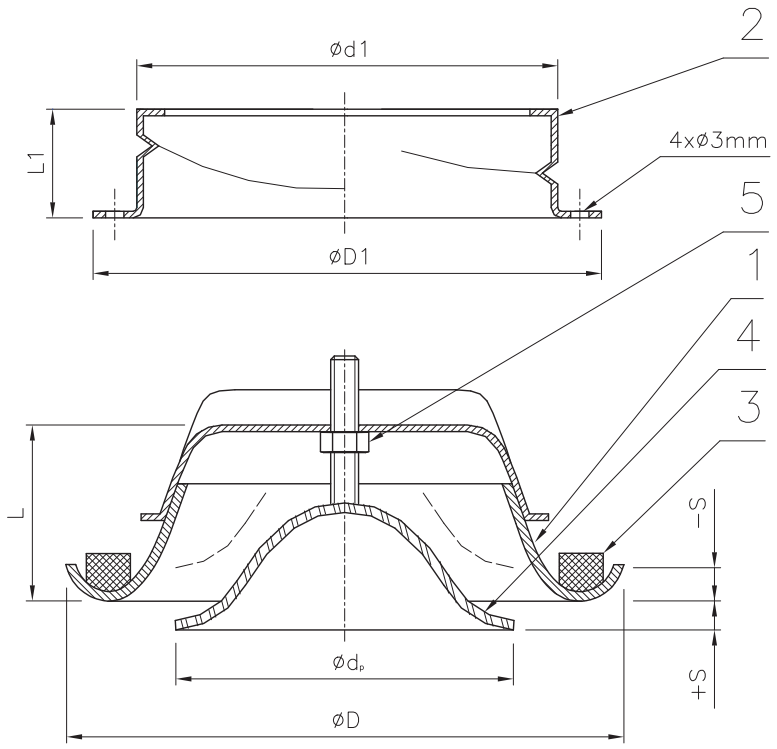

Position:

1. Valve body
2. Valve casing
3. Sealing
4. Disc of valve body
5. Check nut

3.3. Valve for air outlet - TVOM

Fig. 3

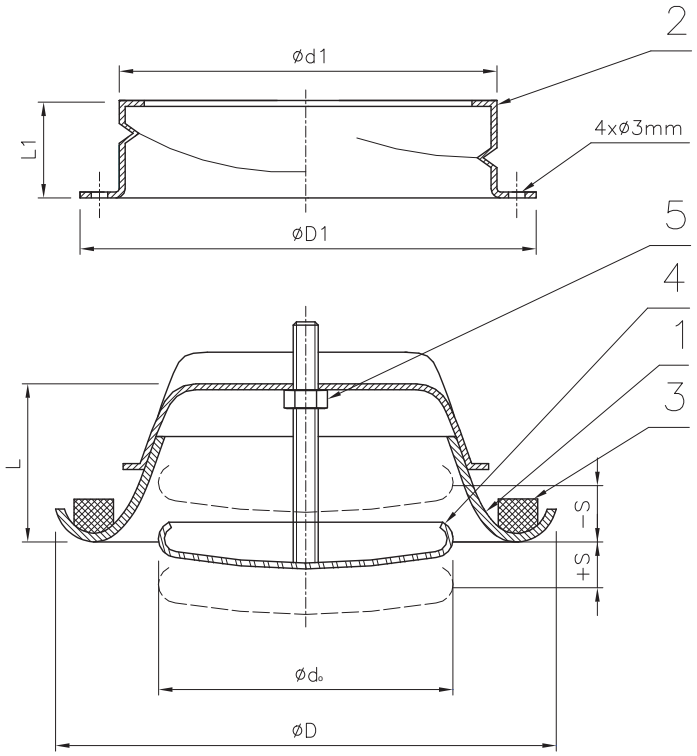

Position:

1. Valve body
2. Valve casing
3. Sealing
4. Disc of valve body
5. Check nut

4. Placement and Assembly

4.1. Valves are installed in ceilings, walls and other constructions.

4.2. Valves have to be connected to straight duct section with length 250 mm to achieve equal flow through valve. It is valid for air supply and air outlet.

III. TECHNICAL DATA

5. Basic parameters

5.1. Basic data

$\dot{V}$	[m³.h⁻¹]	volumetric air flow per one valve
s	[mm]	distance of valve disc from zero position
Δp_c	[Pa]	pressure loss at ρ = 1,2 kg/m³
L_{WA}	[dB(A)]	level of acoustic power

Tab. 5.1.1. Valve for air supply - TVPM

Size	80	100	125	150	160	200
$\dot{V}_{max}$ [m³.h⁻¹]	60	90	150	200	200	250

Tab. 5.1.2. Valve for air outlet - TVOM

Size	80	100	125	150	160	200
$\dot{V}_{max}$ [m³.h⁻¹]	60	90	150	200	200	250

5.2. Pressure loss and sound data

5.2.1. Valve for air supply TVPM

Diagram 5.2.1. TVPM 80

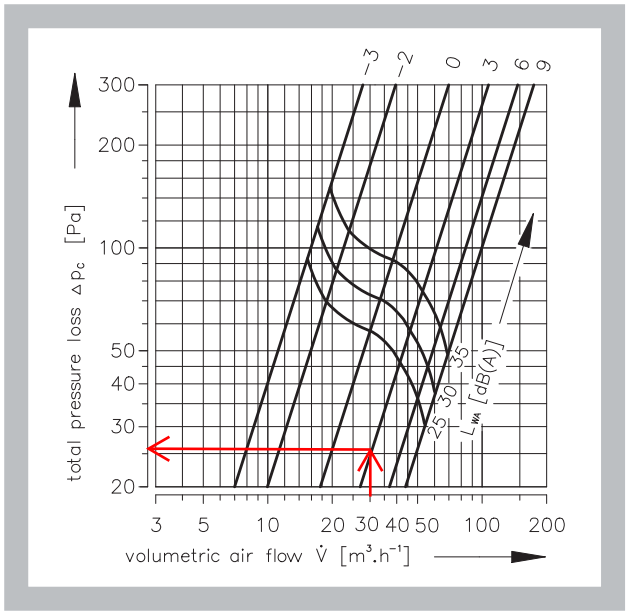

Diagram 5.2.2. TVPM 100

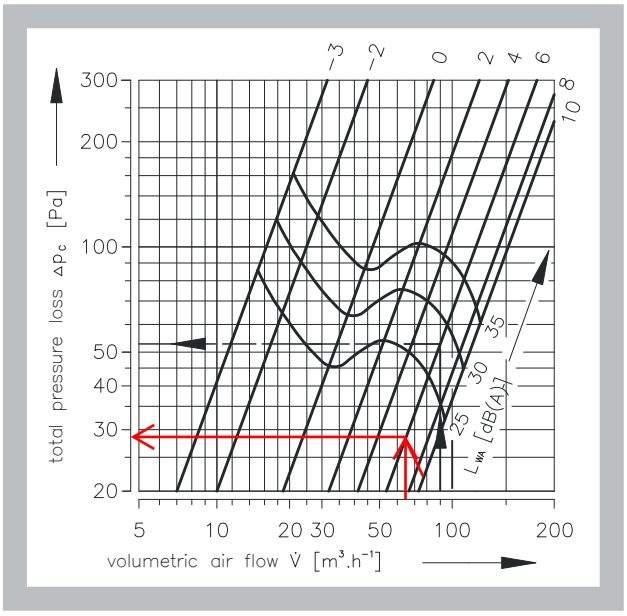

Diagram 5.2.3. TVPM 125

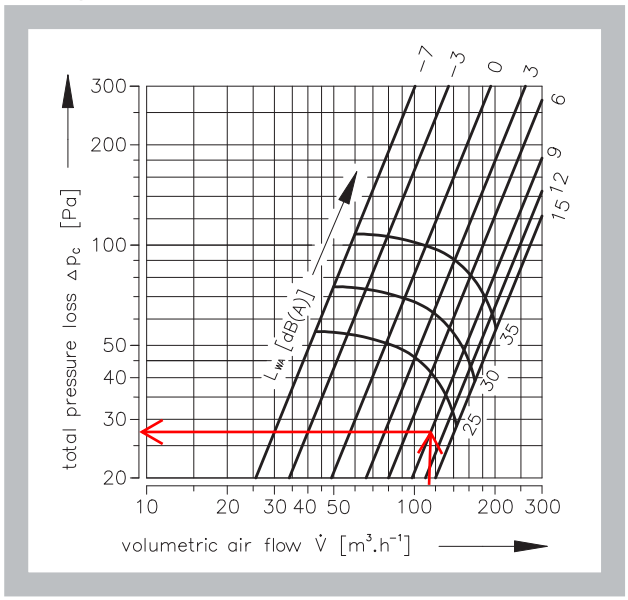

Diagram 5.2.4. TVPM 150

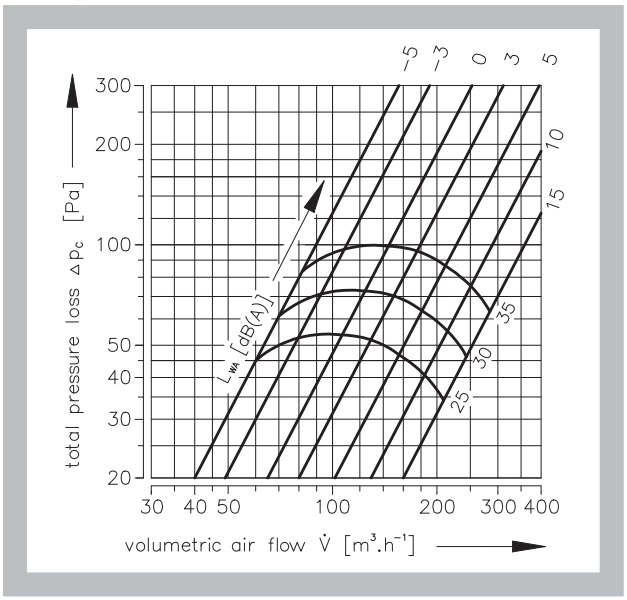

Diagram 5.2.5. TVPM 160

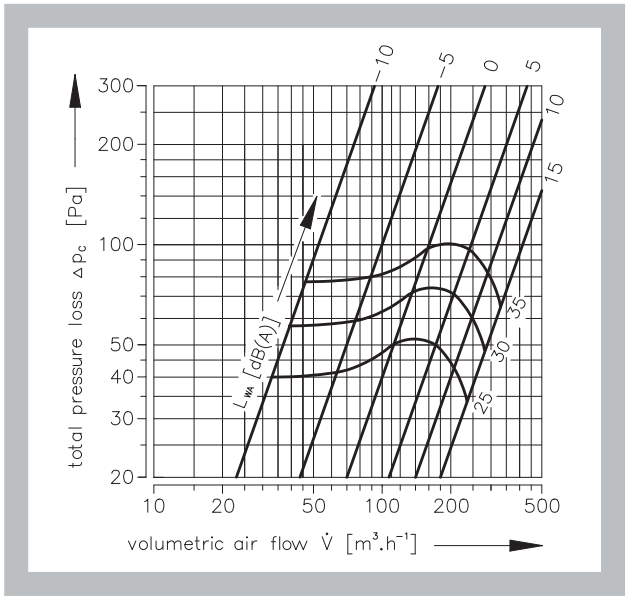

Diagram 5.2.6. TVPM 200

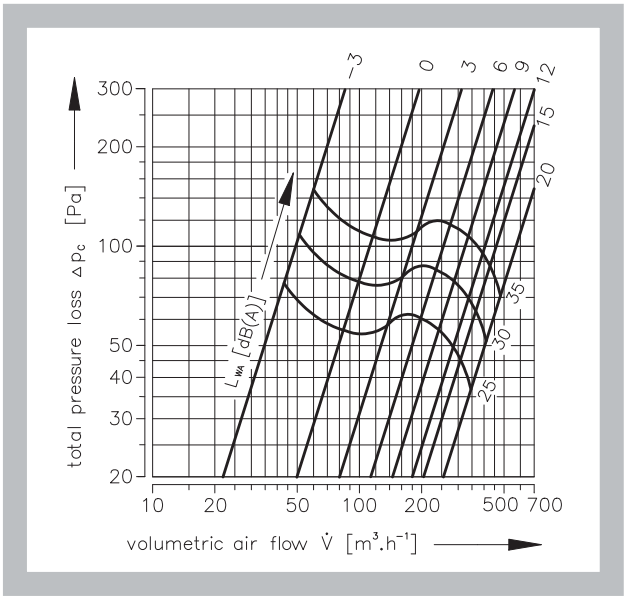

5.2.2. Valve for air outlet

Diagram 5.2.7. TVOM 80

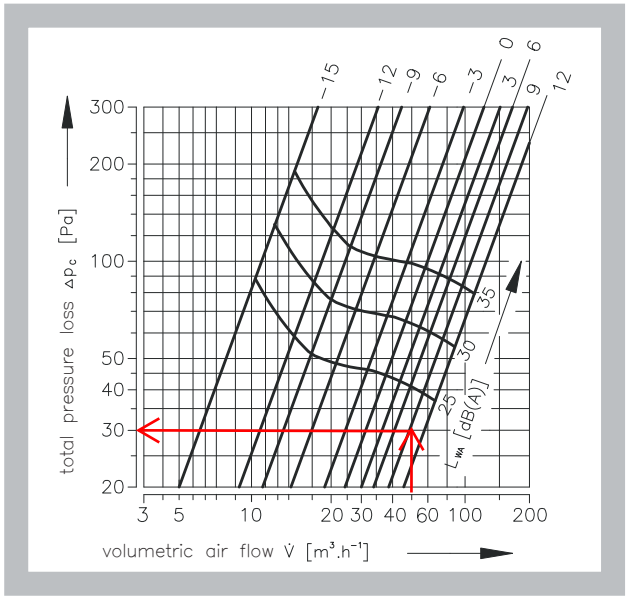

Diagram 5.2.8. TVOM 100

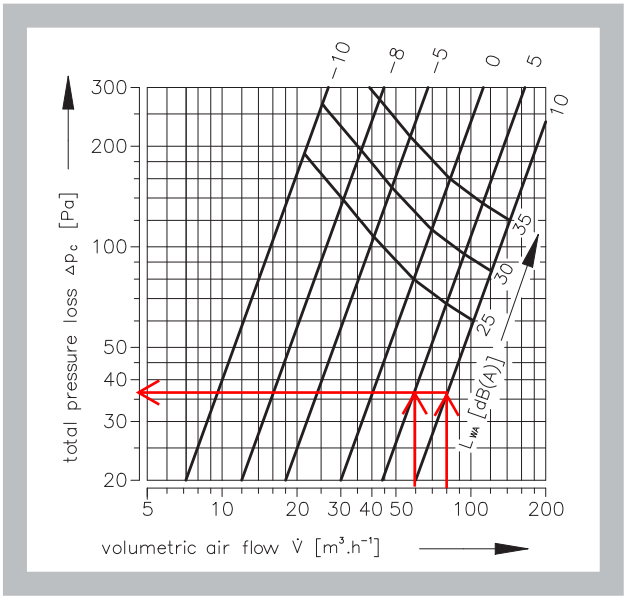

Diagram 5.2.9. TVOM 125

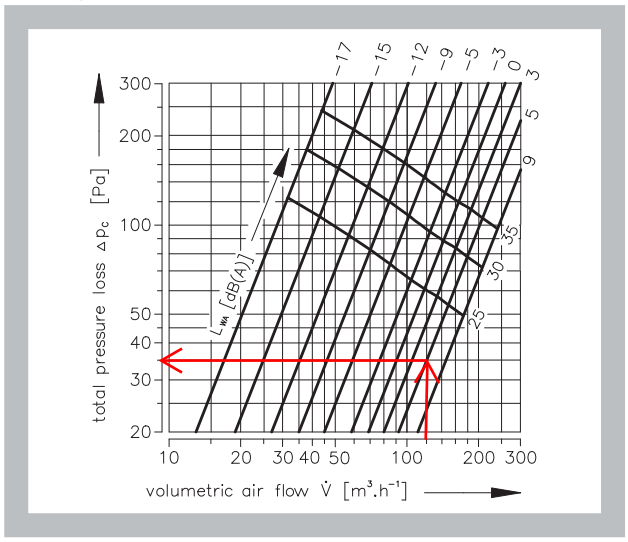

Diagram 5.2.10. TVOM 150

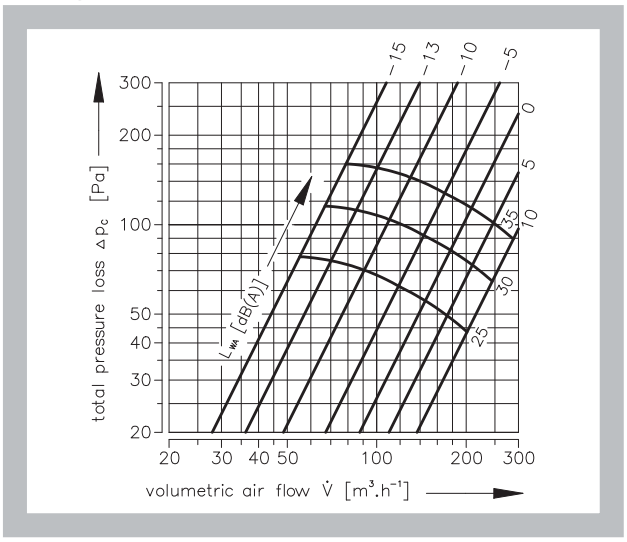

Diagram 5.2.11. TVOM 160

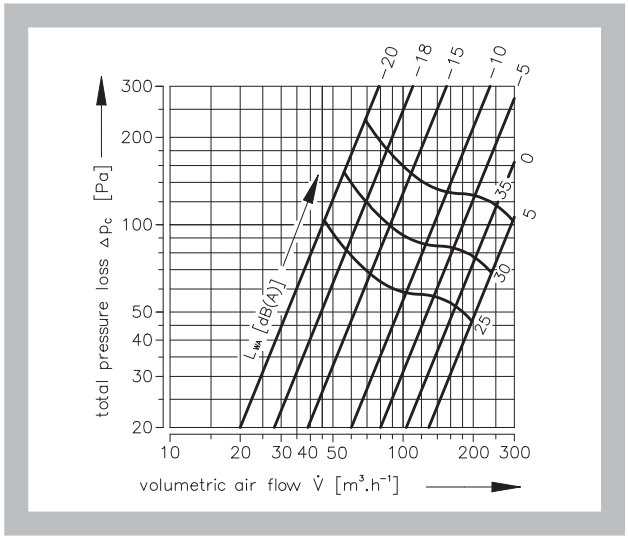

Diagram 5.2.12. TVOM 200

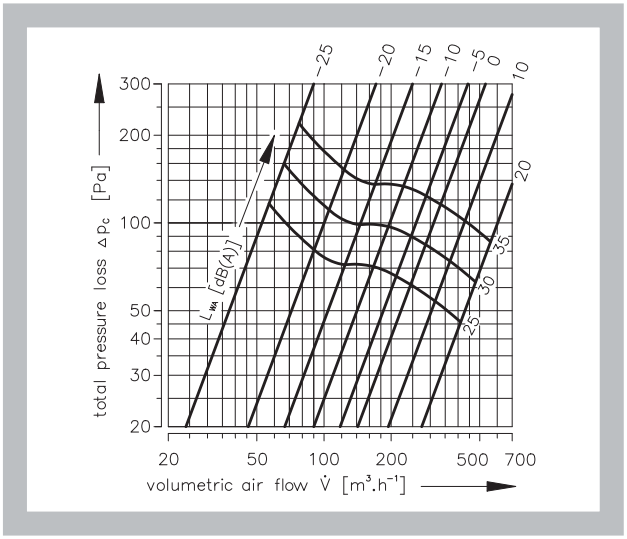

Fig. 4 Example

Given data:	Disc valve TVPM 100
	$\dot{V}$ = 80 m³.h⁻¹
	s = 8 mm
Diagram 5.2.2. :	L_{WA} = 28 dB(A)
	Δp_c = 43 Pa

IV. ORDERING INFORMATION

6. Ordering key

TVPM **100** **TPM 028/03**

- TPM 028/03 — technical specifications
- 100 — size
- TVPM — for air supply
- TVOM — for air outlet

V. MATERIAL

7. Material

7.1. Body and disc of valve are made of steel sheet covered by white color RAL 9010. Casing of valves are made of galvanized sheet.

VI. INSPECTION, TESTING

8. Inspection, testing

8.1. The appliance is constructed and preset by the manufacturer, its operation is dependent on proper installation and adjustment.

VII. TRANSPORTATION AND STORAGE

9. Logistic terms

9.1. Valves are supplied packed in carton packaging. While transported and stored they must be protected against mechanical damage and weather conditions.

9.2. If no method of take-over is mentioned in the order, handing the goods over to the carrier will be considered as a take-over.

9.3. Valves have to be stored in closed premises, in the environment without aggressive steams, gases and dusts. Temperature range have to be from -5 to +40°C and relative humidity max. 80%.

VIII. ASSEMBLY, ATTENDANCE, MAINTENANCE AND REVISIONS

10. Assembly

10.1. Assembly consists of the valve installing in the duct system.

MANDÍK, a.s.
Dobříšská 550
26724 Hostomice
Czech Republic
Tel.: +420 311 706 706
E-Mail: mandik@mandik.cz
www.mandik.com

The producer reserves the right for innovations of the product. For actual product information see www.mandik.com

MANDÍK®

WALL VENT

SVM

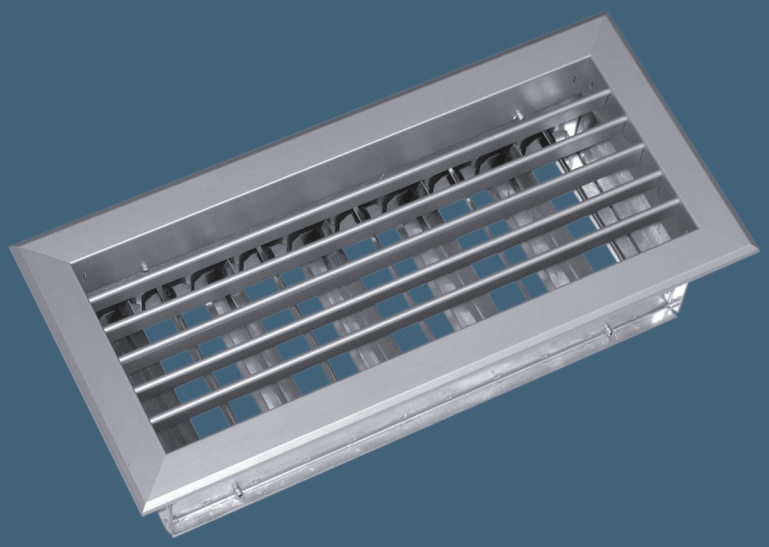

These technical specifications state a row of manufactured sizes and models of wall vents (further only vents) SVM. It is valid for manufacture, designing, ordering, delivery, assembly and operation.

I. CONTENT

II. GENERAL INFORMATION **2**

1. Description..... 2
2. Design..... 2
3. Dimensions, weights..... 3
4. Installation and location..... 9

III. TECHNICAL DATA **10**

5. Basic parameters..... 10
6. Calculation and determination values..... 12
7. Ventilation values..... 13

IV. ORDERING INFORMATION **16**

8. Ordering key..... 16

V. MATERIAL, FINISHING **16**

9. Material..... 16

VI. INSTALATION **16**

10. Assemly and disassembly..... 16

VII. PACKING, TRANSPORTATION, TAKE-OVER, STORAGE AND GUARANTEE **18**

11. Logistic terms..... 18
12. Guarantee..... 18

II. GENERAL INFORMATION

1. Description

1.1. Wall vents are end air-conditioning elements used to distribute air in air-conditioned, ventilated and heated rooms.

1.2. Vents made of aluminium sections are supplied with concealed fastening fixed by spring clips or with screwed fastening.

They consist of rectangular frame which holds either fixed or rotating blades.

They can be equipped with R1 type regulation with counter-rotating blades or with fixing frame (UR version without fixtures or UR2 with fixtures intended for immuring).

The tightness of vents is ensured along the perimeter by means of sealing.

1.3. Vents are designed for macroclimatic areas with mild climate according to EN 60 721-3-3 zm.A2.

Temperature in the place of installation is permitted to range from - 20°C to + 70°C.

Vents are suitable for systems without abrasive, chemical and adhesive particles.

1.4. If is not noticed other way, all dimensions and weight are in millimeters and kilograms.

2. Design

2.1. Vents are supplied either with fixed or rotating blades.

Fixed blades are pitched at 12,5 or 20 mm, while the rotating ones are pitched at 20 mm.

They can be equipped with R1 type regulation with counter-rotating blades.

Vents are installed by using of regulations R1 or fixing frame UR or UR2.

If is requested installation in gypsum constructions it's to be mentioned in a order (in this case are used adapted regulations R1 or fixing frame UR for installation in the gypsum constructions).

Vents are supplied with concealed fastening or screwed fastening.

2.2. Vents with concealed fastening are installed by using fixing frame (UR, UR2 or fixing frame UR for installation in the gypsum constructions), frame of regulation R1 or an atypical frame furnished with an edge for gripping the spring clips (see detail of leaf of fixation frame).

2.3. Vents with screwed fastening are installed by using fixing frame (UR, UR2 or fixing frame UR for installation in the gypsum constructions) or frame of regulation. It's possible direct mounting to the wall without fixing frame or regulation.

Fig. 1 Vent with concealed fastening with horizontal rotating blades equipped by R1 regulation

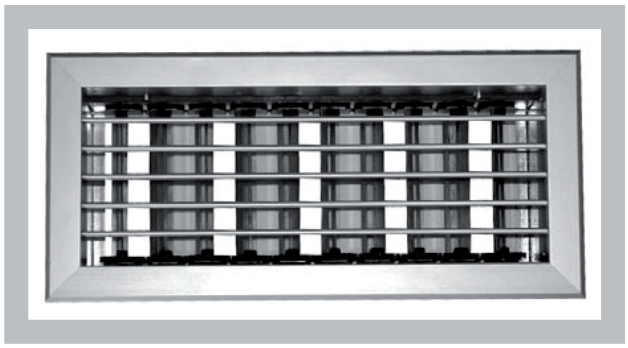

Fig. 2 Vent with screwed fastening with vertical rotating blades

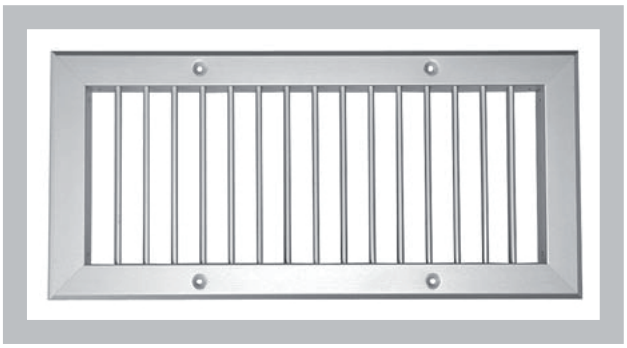

3. Dimestions, weights

3.1. Dimensions and weights of vents and weights with UR, R1

Tab. 3.1.1. Dimensoins, weights

Nominal dimensions	Weight [Kg]			Nominal dimensions	Weight [Kg]		
	vent	s UR	s R1		vent	s UR	s R1
200 x 50	0,32	0,64	0,94	280 x 300	1,07	1,75	2,71
x 75	0,38	0,72	1,07	x 325	1,13	1,85	2,86
x 80	0,40	0,74	1,11	x 400	1,34	2,13	3,32
x 100	0,43	0,80	1,20	x 425	1,41	2,23	3,47
x 125	0,48	0,88	1,32	x 500	1,61	2,49	3,93
x 140	0,51	0,93	1,40	x 525	1,68	2,61	4,08
x 150	0,53	0,96	1,45	300 x 50	0,40	0,83	1,26
x 200	0,64	1,12	1,71	x 75	0,48	0,93	1,42
x 225	0,69	1,19	1,83	x 80	0,51	0,96	1,47
x 280	0,82	1,38	2,12	x 100	0,54	1,02	1,58
x 300	0,85	1,43	2,22	x 125	0,62	1,12	1,74
x 325	0,90	1,51	2,34	x 140	0,65	1,18	1,83
x 400	1,06	1,75	2,73	x 150	0,69	1,22	1,90
x 425	1,12	1,84	2,85	x 200	0,83	1,41	2,22
x 500	1,28	2,05	3,24	x 225	0,90	1,51	2,38
x 525	1,33	2,15	3,37	x 280	1,08	1,74	2,75
225 x 50	0,34	0,69	1,02	x 300	1,12	1,81	2,86
x 75	0,40	0,77	1,16	x 325	1,19	1,91	3,02
x 80	0,42	0,80	1,20	x 400	1,41	2,20	3,51
x 100	0,45	0,85	1,30	x 425	1,48	2,30	3,67
x 125	0,51	0,94	1,43	x 500	1,69	2,57	4,15
x 140	0,54	0,99	1,51	x 525	1,77	2,70	4,32
x 150	0,57	1,02	1,57	325 x 50	0,42	0,87	1,34
x 200	0,69	1,19	1,85	x 75	0,50	0,98	1,51
x 225	0,74	1,27	1,98	x 80	0,53	1,01	1,56
x 280	0,88	1,47	2,30	x 100	0,57	1,08	1,68
x 300	0,92	1,53	2,39	x 125	0,65	1,18	1,85
x 325	0,98	1,61	2,53	x 140	0,69	1,25	1,95
x 400	1,15	1,86	2,94	x 150	0,73	1,28	2,02
x 425	1,21	1,95	3,08	x 200	0,88	1,49	2,36
x 500	1,38	2,18	3,49	x 225	0,96	1,59	2,53
x 525	1,44	2,29	3,63	x 280	1,14	1,83	2,92
280 x 50	0,39	0,81	1,19	x 300	1,19	1,90	3,04
x 75	0,46	0,91	1,34	x 325	1,26	2,00	3,21
x 80	0,48	0,93	1,38	x 400	1,49	2,31	3,72
x 100	0,52	1,00	1,49	x 425	1,57	2,42	3,89
x 125	0,59	1,09	1,64	x 500	1,80	2,70	4,41
x 140	0,62	1,16	1,73	x 525	1,88	2,83	4,58
x 150	0,66	1,19	1,79	400 x 50	0,48	1,01	1,57
x 200	0,79	1,38	2,10	75	0,58	1,13	1,76
x 225	0,86	1,47	2,25	80	0,62	1,17	1,83
x 280	1,03	1,69	2,61	100	0,66	1,24	1,96

Nominal dimensions	Weight [Kg]			Nominal dimensions	Weight [Kg]		
	vent	s UR	s R1		vent	s UR	s R1
400 x 125	0,75	1,36	2,15	600 x 50	0,65	1,40	2,22
x 140	0,80	1,43	2,26	x 75	0,78	1,55	2,49
x 150	0,84	1,48	2,34	x 80	0,84	1,61	2,58
x 200	1,02	1,71	2,74	x 100	0,91	1,71	2,76
x 225	1,12	1,83	2,93	x 125	1,04	1,86	3,02
x 280	1,34	2,10	3,38	x 140	1,11	1,95	3,18
x 300	1,39	2,18	3,51	x 150	1,17	2,01	3,29
x 325	1,48	2,30	3,70	x 200	1,43	2,33	3,83
x 400	1,75	2,65	4,29	x 225	1,56	2,48	4,09
x 425	1,84	2,77	4,48	x 280	1,87	2,85	4,72
x 500	2,11	3,09	5,06	x 300	1,94	2,95	4,89
x 525	2,20	3,24	5,26	x 325	2,07	3,10	5,16
425 x 50	0,50	1,06	1,65	x 400	2,46	3,57	5,96
x 75	0,60	1,18	1,86	x 425	2,59	3,73	6,23
x 80	0,64	1,23	1,92	x 500	2,98	4,17	7,03
x 100	0,69	1,30	2,06	x 525	3,11	4,36	7,30
x 125	0,79	1,42	2,26	625 x 50	0,67	1,44	2,29
x 140	0,84	1,50	2,38	x 75	0,81	1,60	2,56
x 150	0,88	1,54	2,46	x 80	0,86	1,66	2,65
x 200	1,07	1,79	2,88	x 100	0,94	1,76	2,84
x 225	1,17	1,91	3,08	x 125	1,07	1,92	3,10
x 280	1,40	2,19	3,55	x 140	1,14	2,01	3,26
x 300	1,45	2,27	3,69	x 150	1,21	2,08	3,38
x 325	1,55	2,40	3,89	x 200	1,48	2,40	3,92
x 400	1,83	2,76	4,51	x 225	1,61	2,56	4,19
x 425	1,93	2,89	4,71	x 280	1,94	2,94	4,83
x 500	2,22	3,22	5,32	x 300	2,01	3,04	5,01
x 525	2,31	3,37	5,53	x 325	2,15	3,20	5,28
500 x 50	0,57	1,20	1,89	x 400	2,55	3,68	6,13
x 75	0,67	1,34	2,11	x 425	2,68	3,85	6,37
x 80	0,72	1,39	2,19	x 500	3,08	4,30	7,18
x 100	0,78	1,47	2,34	x 525	3,22	4,49	7,46
x 125	0,89	1,60	2,57	700 x 50	0,74	1,58	2,54
x 140	0,95	1,69	2,70	x 75	0,88	1,76	2,85
x 150	1,00	1,74	2,79	x 80	0,95	1,82	2,94
x 200	1,22	2,01	3,25	x 100	1,03	1,93	3,15
x 225	1,33	2,15	3,48	x 125	1,18	2,10	3,45
x 280	1,60	2,47	4,01	x 140	1,25	2,20	3,62
x 300	1,65	2,55	4,16	x 150	1,33	2,28	3,75
x 325	1,76	2,69	4,39	x 200	1,62	2,63	4,36
x 400	2,10	3,10	5,07	x 225	1,77	2,80	4,66
x 425	2,20	3,24	5,30	x 280	2,13	3,22	5,37
x 500	2,53	3,61	5,98	x 300	2,21	3,32	5,57
x 525	2,64	3,78	6,21	x 325	2,36	3,50	5,87
525 x 50	0,59	1,25	1,97	x 400	2,80	4,02	6,78
x 75	0,70	1,39	2,20	x 425	2,95	4,20	7,08
x 80	0,75	1,44	2,28	x 500	3,40	4,69	7,99
x 100	0,81	1,52	2,44	x 525	3,55	4,90	8,30
x 125	0,92	1,66	2,68	725 x 50	0,76	1,63	2,63
x 140	0,98	1,75	2,81	x 75	0,91	1,81	2,94
x 150	1,04	1,81	2,91	x 80	0,98	1,88	3,04
x 200	1,27	2,09	3,39	x 100	1,06	1,98	3,25
x 225	1,38	2,23	3,63	x 125	1,21	2,16	3,56
x 280	1,66	2,56	4,18	x 140	1,29	2,27	3,74
x 300	1,72	2,65	4,34	x 150	1,36	2,34	3,87
x 325	1,84	2,79	4,57	x 200	1,67	2,70	4,50
x 400	2,18	3,21	5,29	x 225	1,82	2,88	4,81
x 425	2,29	3,35	5,52	x 280	2,20	3,31	5,54
x 500	2,63	3,74	6,23	x 300	2,28	3,42	5,74
x 525	2,75	3,91	6,48	x 325	2,43	3,59	6,06

Nominal dimensions	Weight [Kg]			Nominal dimensions	Weight [Kg]		
	vent	s UR	s R1		vent	s UR	s R1
725 x 400	2,89	4,13	6,99	925 x 225	2,25	3,52	5,92
x 425	3,04	4,32	7,30	x 280	2,71	4,05	6,81
x 500	3,50	4,82	8,24	x 300	2,82	4,17	7,06
x 525	3,65	5,03	8,56	x 325	3,01	4,39	7,43
800 x 50	0,82	1,79	2,87	x 400	3,58	5,04	8,57
x 75	0,98	1,98	3,21	x 425	3,77	5,26	8,94
x 80	1,06	2,06	3,32	x 500	4,34	5,88	10,08
x 100	1,15	2,17	3,55	x 525	4,53	6,13	10,47
x 125	1,31	2,36	3,88	1000 x 50	0,98	2,16	3,51
x 140	1,40	2,47	4,07	x 75	1,18	2,39	3,91
x 150	1,48	2,56	4,21	x 80	1,28	2,49	4,04
x 200	1,81	2,95	4,89	x 100	1,38	2,62	4,31
x 225	1,98	3,13	5,22	x 125	1,59	2,85	4,71
x 280	2,39	3,60	6,01	x 140	1,69	2,98	4,94
x 300	2,48	3,71	6,23	x 150	1,79	3,08	5,11
x 325	2,65	3,91	6,56	x 200	2,20	3,54	5,92
x 400	3,15	4,49	7,57	x 225	2,40	3,77	6,32
x 425	3,31	4,68	7,91	x 280	2,91	4,33	7,26
x 500	3,81	5,23	8,91	300	3,02	4,46	7,53
x 525	3,98	5,46	9,26	x 325	3,22	4,69	7,93
825 x 50	0,84	1,83	2,96	x 400	3,83	5,38	9,14
x 75	1,01	2,03	3,30	x 425	4,04	5,62	9,53
x 80	1,09	2,11	3,41	x 500	4,65	6,28	10,74
x 100	1,18	2,23	3,65	x 525	4,85	6,54	11,16
x 125	1,35	2,42	3,99	1025 x 50	1,00	2,21	3,59
x 140	1,44	2,54	4,19	x 75	1,21	2,44	4,00
x 150	1,52	2,62	4,33	x 80	1,31	2,54	4,13
x 200	1,86	3,02	5,03	x 100	1,41	2,67	4,42
x 225	2,03	3,21	5,37	x 125	1,62	2,91	4,82
x 280	2,46	3,69	6,18	x 140	1,73	3,04	5,04
x 300	2,55	3,81	6,41	x 150	1,83	3,14	5,23
x 325	2,72	4,00	6,75	x 200	2,25	3,61	5,35
x 400	3,23	4,60	7,79	x 225	2,46	3,85	6,47
x 425	3,40	4,80	8,13	x 280	2,97	4,42	7,44
x 500	3,92	5,37	9,17	x 300	3,08	4,55	7,70
x 525	4,09	5,59	9,52	x 325	3,29	4,79	8,11
900 x 50	0,90	1,97	3,19	x 400	3,92	5,49	9,35
x 75	1,08	2,19	3,56	x 425	4,13	5,73	9,76
x 80	1,17	2,27	3,68	x 500	4,75	6,41	11,00
x 100	1,27	2,39	3,93	x 525	4,96	6,67	11,42
x 125	1,45	2,60	4,30	1120 x 50	1,08	2,43	3,90
x 140	1,55	2,73	4,50	x 75	1,31	2,68	4,34
x 150	1,64	2,82	4,66	x 80	1,42	2,79	4,49
x 200	2,01	3,24	5,41	x 100	1,54	2,93	4,79
x 225	2,19	3,45	5,77	x 125	1,76	3,18	5,23
x 280	2,65	3,96	6,64	x 140	1,88	3,33	5,48
x 300	2,75	4,09	6,88	x 150	1,99	3,44	5,68
x 325	2,93	4,30	7,25	x 200	2,45	3,95	6,57
x 400	3,49	4,93	8,36	x 225	2,68	4,20	7,02
x 425	3,68	5,15	8,72	x 280	3,24	4,82	8,06
x 500	4,23	5,76	9,83	x 300	3,36	4,96	8,35
x 525	4,42	6,00	10,21	x 325	3,59	5,22	8,80
925 x 50	0,92	2,01	3,27	x 400	4,27	5,98	10,14
x 75	1,11	2,23	3,65	x 425	4,50	6,24	10,58
x 80	1,20	2,32	3,77	x 500	5,18	6,97	11,92
x 100	1,29	2,44	4,03	x 525	5,41	7,26	12,37
x 125	1,48	2,66	4,41	1200 x 50	1,15	2,52	4,16
x 140	1,58	2,78	4,62	x 75	1,39	2,79	4,63
x 150	1,68	2,88	4,78	x 80	1,51	2,91	4,79
x 200	2,06	3,31	5,54	x 100	1,63	3,06	5,12

Nominal dimensions	Weight [Kg]			Nominal dimensions	Weight [Kg]		
	vent	s UR	s R1		vent	s UR	s R1
1200 x 125	1,87	3,33	5,58	1225 x 80	1,53	2,98	4,89
x 140	2,00	3,48	5,85	x 100	1,66	3,13	5,22
x 150	2,12	3,60	6,06	x 125	1,91	3,41	5,69
x 200	2,60	4,14	7,01	x 140	2,03	3,56	5,97
x 225	2,85	4,40	7,49	x 150	2,16	3,68	6,18
x 280	3,45	5,06	8,60	x 200	2,65	4,23	7,15
x 300	3,57	5,21	8,91	x 225	2,90	4,50	7,64
x 325	3,82	5,48	9,38	x 280	3,51	5,17	8,77
x 400	4,55	6,29	10,81	x 300	3,64	5,32	9,09
x 425	4,79	6,56	11,28	x 325	3,89	5,60	9,57
x 500	5,52	7,34	12,71	x 400	4,63	6,42	11,03
x 525	5,76	7,64	13,20	x 425	4,88	6,74	11,55
1225 x 50	1,17	2,59	4,24	x 500	5,62	7,49	12,96
x 75	1,42	2,86	4,72	x 525	5,87	7,83	13,50

Atypical dimensions should be discussed with the manufacturer.

3.2. Opening for installation of a vent equipped by fixing frame

Fig. 3 Opening for installation of a vent equipped by fixing frame

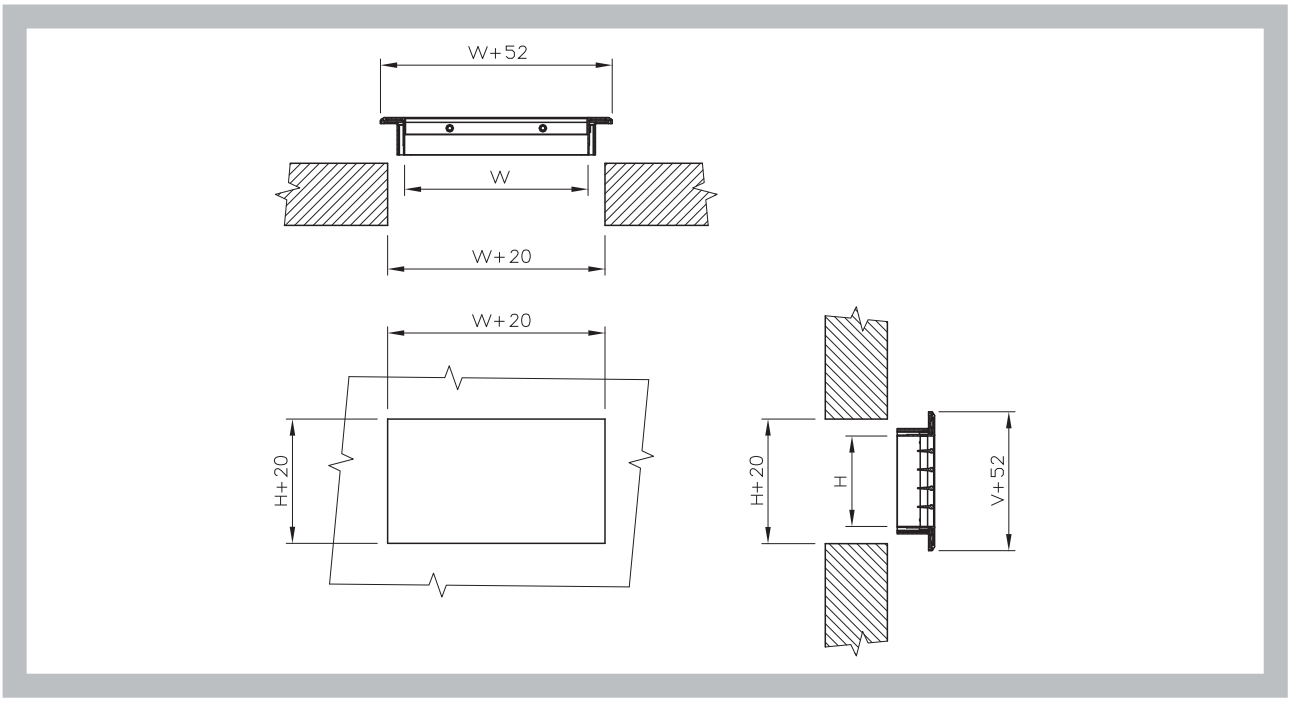

Fig. 4 Vent with fixed horizontal blades, blades are pitched at 12,5 mm (design PV)

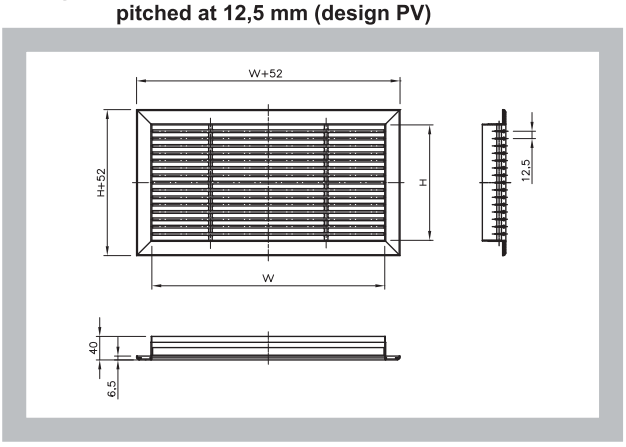

Fig. 5 Vent with fixed horizontal blades, blades are pitched at 20 mm (design PV)

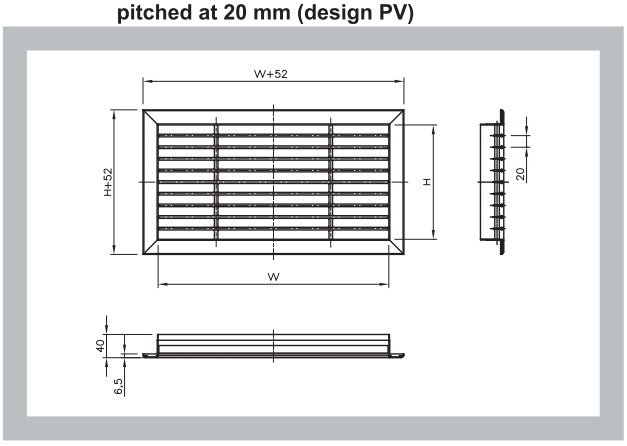

Fig. 6 Vent with fixed vertical blades, blades are pitched at 12,5 mm (design PS)

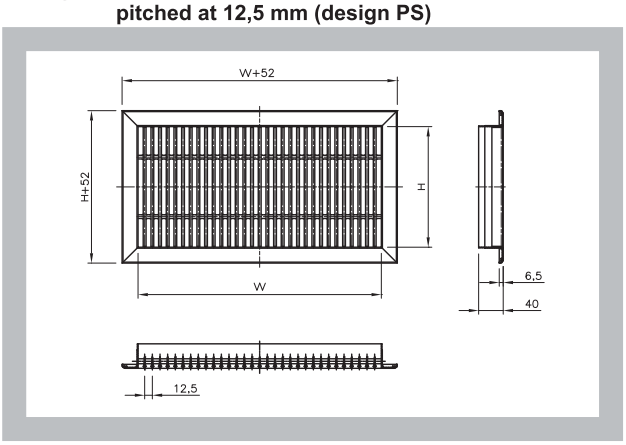

Fig. 7 Vent with fixed vertical blades, blades are pitched at 20 mm (design PS)

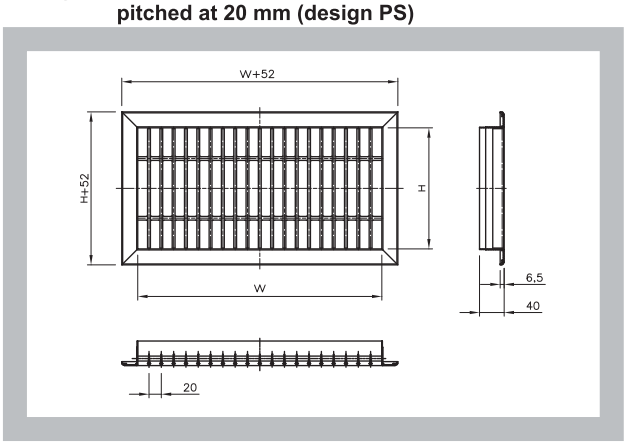

Fig. 8 Vent with horizontal adjustable blades, blades are pitched at 20 mm (design NV)

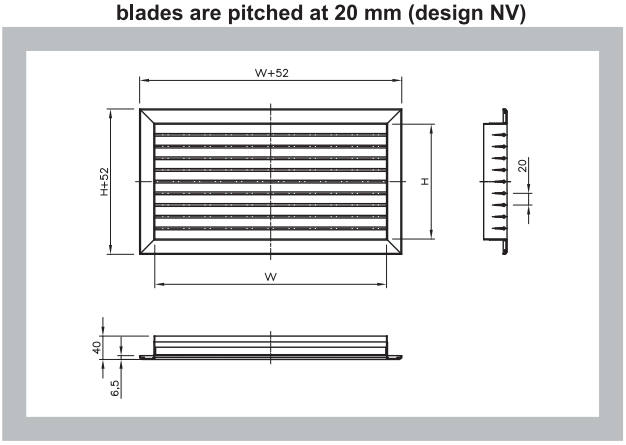

Fig. 9 Vent with vertical adjustable blades, blades are pitched at 20 mm (design NS)

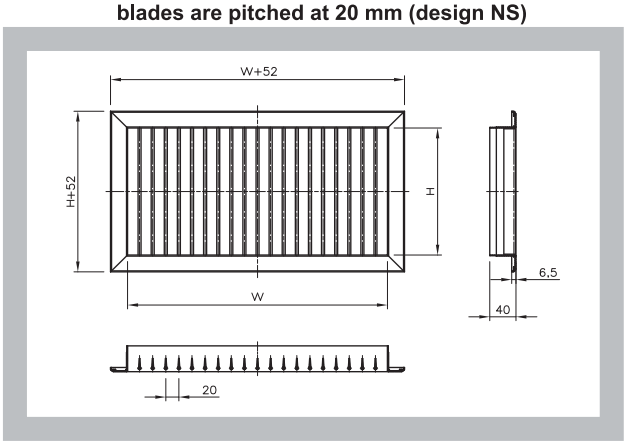

Fig. 10 Vent with horizontal adjustable blades, blades are pitched at 20 mm (design NV) (W ≥ 750mm)

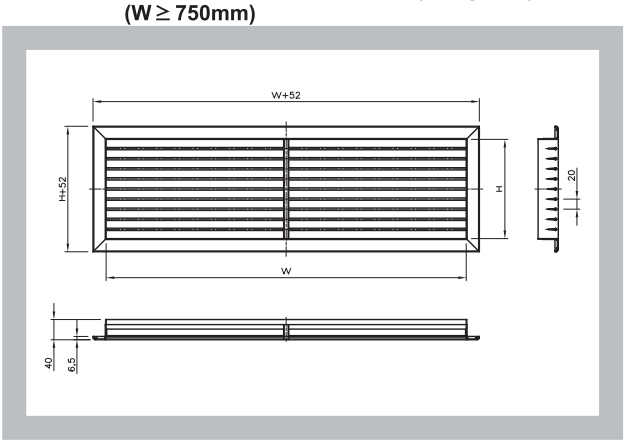

3.2. Regulation R1

Fig. 11 Regulation R1

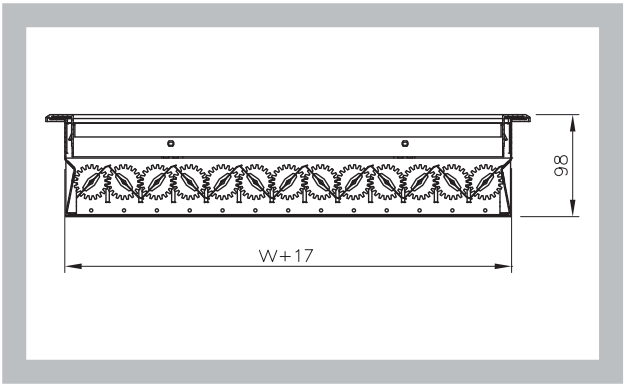

3.3. Fixing frame

Fig. 12 Fixing frame UR

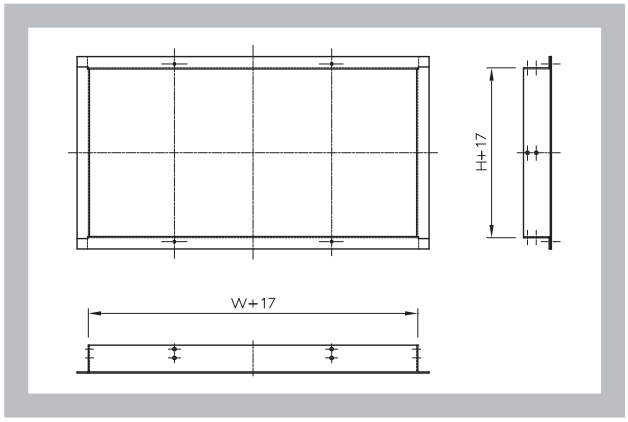

Fig. 13 Fixing frame UR for installation in the gypsum constructions

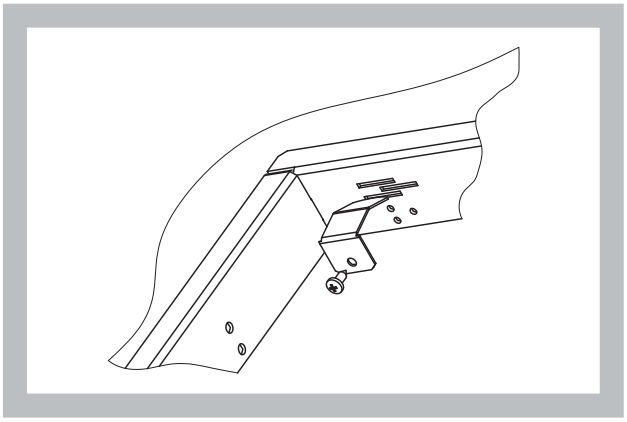

Fig. 14 Fixing frame UR for installation in the gypsum constructions

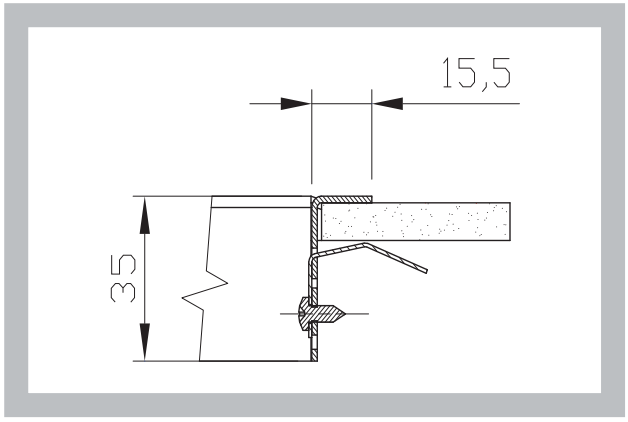

Fig. 15 Regulation R1 for installation in the gypsum constructions

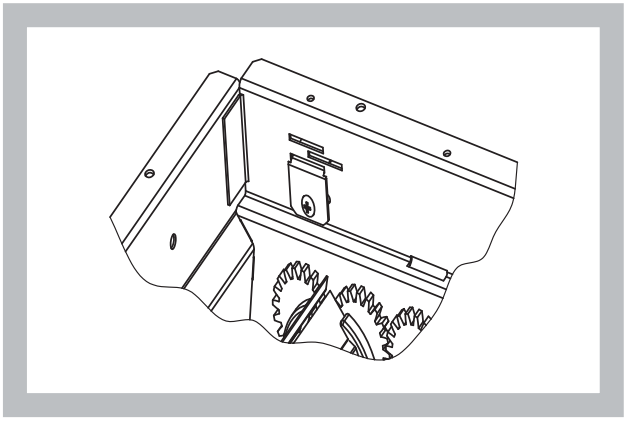

3.4. Details

Fig. 16 Detail of blade profile

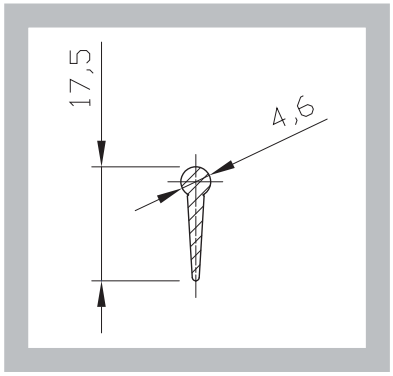

Fig. 17 Detail of concealed fastening

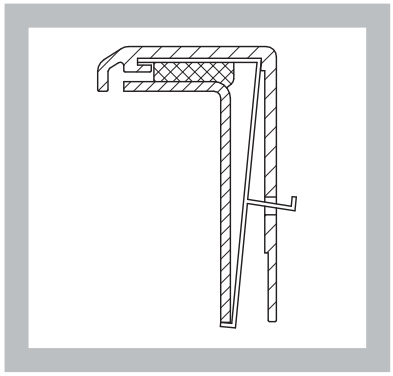

Fig. 18 Detail of leaf on fixation frame

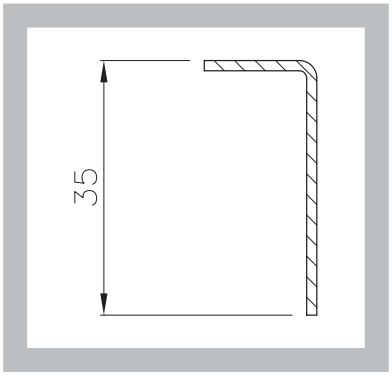

Fig. 19 Detail of spring clip

Fig. 20 Detail of vent frame for screwed fastening

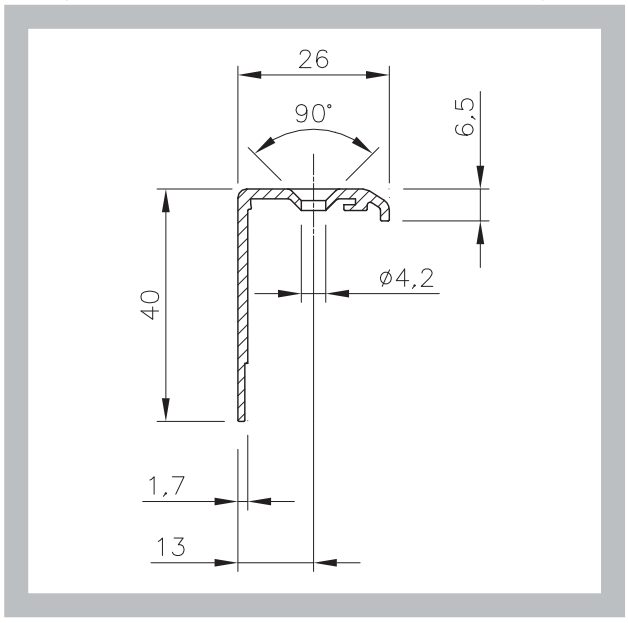

4. Installation and location

4.1. Grilles are intended for installation in building structures. The installation is made by means of fixing frames or the regulation R1. For screwed fastening is possible direct mounting to the wall without fixing frame or regulation.

Fig. 21 Concealed fastening

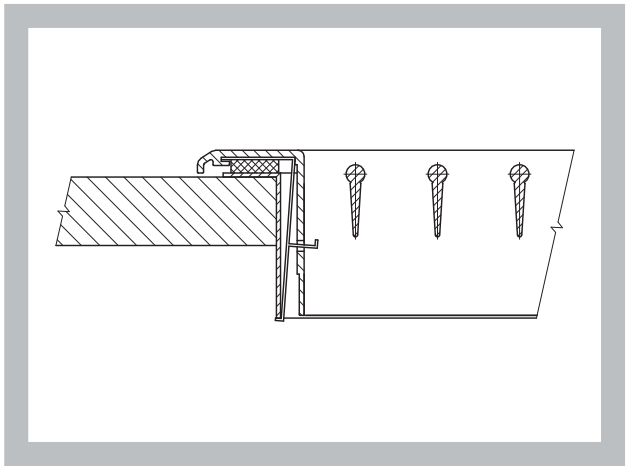

Fig. 22 Screwed fastening

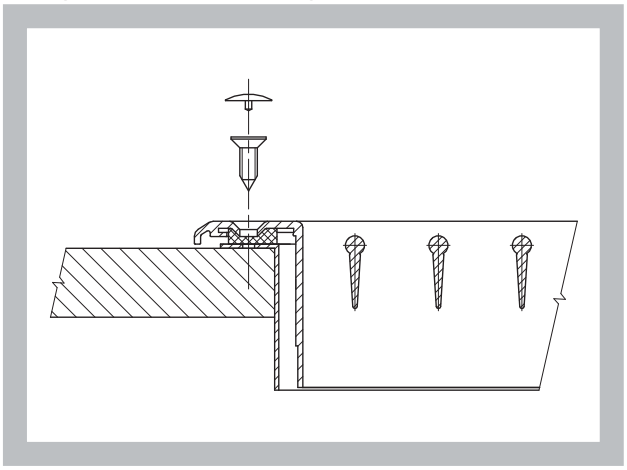

4.2. Installation made by means of fixing frames UR

Fig. 23 Concealed fastening

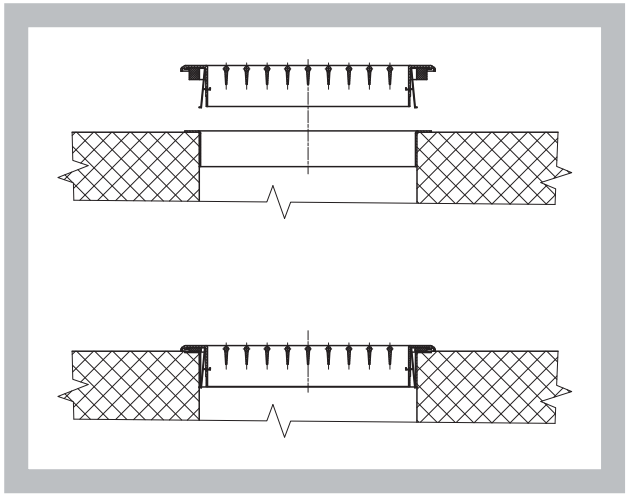

Fig. 24 Screwed fastening

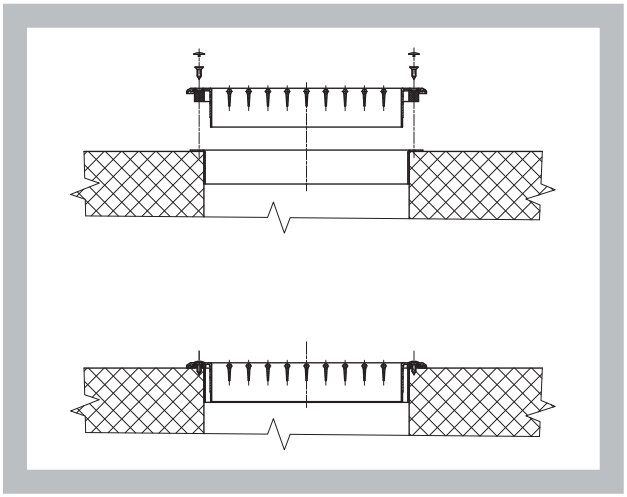

4.3. Installation made by means of fixing frame UR2

Fig. 25 Concealed fastening

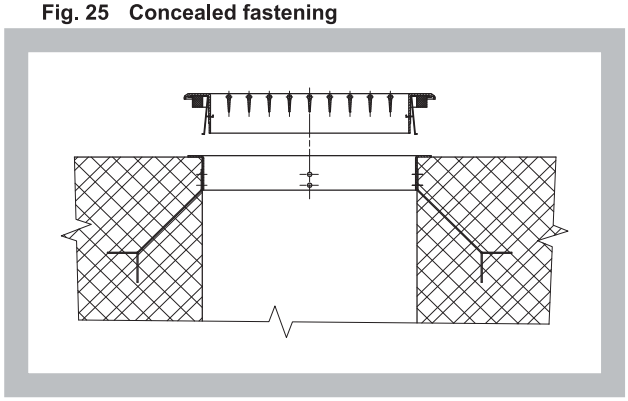

Fig. 26 Screwed fastening

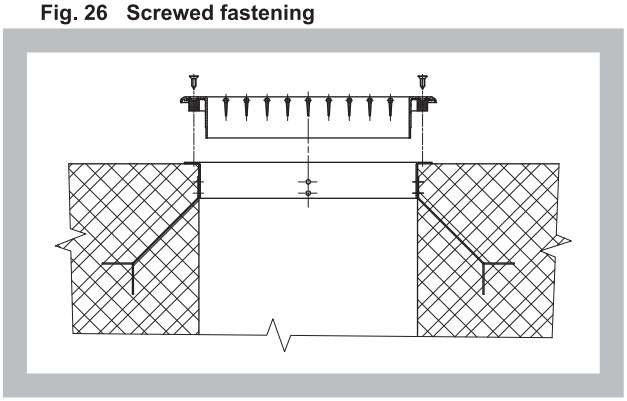

4.4. Installation made by means of regulation R1

Fig.27 Concealed fastening

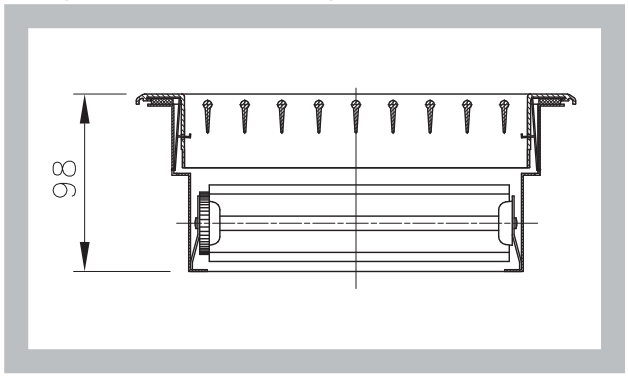

Fig. 28 Screwed fastening

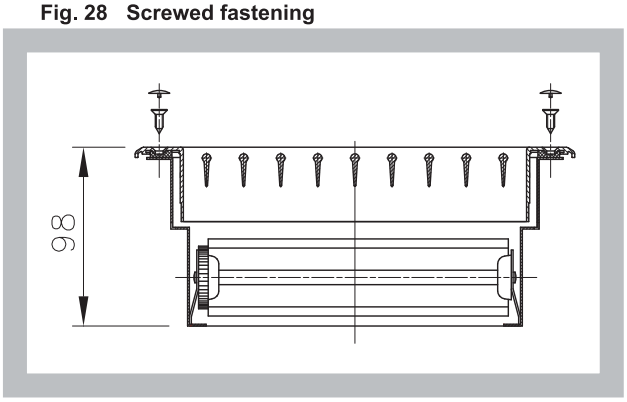

III. TECHNICAL DATA

5. Basic parameters

5.1. Efective area

Tab. 5.1.1. SVM PV 12,5

Dimensions		Efective area S_{ef} [m^2]															
		H															
		50	75	80	100	125	140	150	200	225	280	300	325	400	425	500	525
W	200	0,0072	0,0104	0,0105	0,0136	0,0167	0,0188	0,0199	0,0262	0,0294	0,0358	0,0388	0,0420	0,0515	0,0546	0,0641	0,0673
	225	0,0081	0,0117	0,0118	0,0153	0,0188	0,0212	0,0224	0,0295	0,0330	0,0402	0,0437	0,0473	0,0579	0,0615	0,0721	0,0757
	280	0,0101	0,0146	0,0147	0,0190	0,0234	0,0263	0,0278	0,0367	0,0411	0,0501	0,0544	0,0588	0,0721	0,0765	0,0898	0,0942
	300	0,0109	0,0156	0,0157	0,0203	0,0251	0,0282	0,0298	0,0393	0,0440	0,0536	0,0583	0,0630	0,0772	0,0820	0,0962	0,1009
	325	0,0118	0,0169	0,0170	0,0220	0,0272	0,0306	0,0323	0,0426	0,0477	0,0581	0,0631	0,0683	0,0837	0,0888	0,1042	0,1093
	400	0,0145	0,0208	0,0210	0,0271	0,0334	0,0376	0,0398	0,0524	0,0587	0,0715	0,0777	0,0840	0,1030	0,1093	0,1282	0,1346
	425	0,0154	0,0221	0,0223	0,0288	0,0355	0,0400	0,0422	0,0557	0,0624	0,0760	0,0825	0,0893	0,1094	0,1161	0,1363	0,1430
	500	0,0181	0,0260	0,0262	0,0339	0,0418	0,0470	0,0497	0,0655	0,0734	0,0894	0,0971	0,1050	0,1287	0,1366	0,1603	0,1682
	525	0,0190	0,0273	0,0275	0,0356	0,0439	0,0494	0,0522	0,0688	0,0771	0,0939	0,1020	0,1103	0,1351	0,1434	0,1683	0,1766
	600	0,0217	0,0312	0,0314	0,0407	0,0502	0,0564	0,0596	0,0786	0,0881	0,1073	0,1165	0,1260	0,1544	0,1639	0,1924	0,2018
	625	0,0226	0,0325	0,0328	0,0424	0,0523	0,0588	0,0621	0,0819	0,0918	0,1118	0,1214	0,1313	0,1609	0,1708	0,2004	0,2103
	700	0,0253	0,0364	0,0367	0,0475	0,0585	0,0658	0,0696	0,0917	0,1028	0,1252	0,1359	0,1470	0,1802	0,1912	0,2244	0,2355
	725	0,0262	0,0377	0,0380	0,0492	0,0606	0,0682	0,0721	0,0950	0,1064	0,1296	0,1408	0,1523	0,1866	0,1981	0,2324	0,2439
	800	0,0290	0,0416	0,0419	0,0542	0,0669	0,0752	0,0795	0,1048	0,1174	0,1430	0,1554	0,1680	0,2059	0,2186	0,2565	0,2691
	825	0,0299	0,0429	0,0432	0,0559	0,0690	0,0776	0,0820	0,1081	0,1211	0,1475	0,1602	0,1733	0,2124	0,2254	0,2645	0,2775
	900	0,0326	0,0468	0,0472	0,0610	0,0752	0,0846	0,0895	0,1179	0,1321	0,1609	0,1748	0,1890	0,2317	0,2459	0,2885	0,3028
	925	0,0335	0,0481	0,0485	0,0627	0,0773	0,0870	0,0919	0,1212	0,1358	0,1654	0,1796	0,1943	0,2381	0,2527	0,2966	0,3112
	1000	0,0362	0,0520	0,0524	0,0678	0,0836	0,0940	0,0994	0,1310	0,1468	0,1788	0,1942	0,2100	0,2574	0,2732	0,3206	0,3364
	1025	0,0371	0,0533	0,0537	0,0695	0,0857	0,0964	0,1019	0,1343	0,1505	0,1833	0,1991	0,2153	0,2638	0,2800	0,3286	0,3448
	1120	0,0405	0,0582	0,0587	0,0759	0,0936	0,1053	0,1113	0,1467	0,1644	0,2003	0,2175	0,2352	0,2883	0,3060	0,3591	0,3768
	1200	0,0434	0,0624	0,0629	0,0814	0,1003	0,1128	0,1193	0,1572	0,1762	0,2146	0,2330	0,2520	0,3089	0,3278	0,3847	0,4037
	1225	0,0443	0,0637	0,0642	0,0831	0,1024	0,1152	0,1218	0,1605	0,1798	0,2190	0,2379	0,2573	0,3153	0,3347	0,3927	0,4121

Tab. 5.1.2. SVM PV 20 a SVM NV

Dimen-sions		Efective area S_{ef} [m^2]															
		H															
		50	75	80	100	125	140	150	200	225	280	300	325	400	425	500	525
W	200	0,0082	0,0122	0,0132	0,0163	0,0204	0,0225	0,0236	0,0317	0,0358	0,0440	0,0471	0,0512	0,0625	0,0666	0,0779	0,0820
	225	0,0092	0,0138	0,0149	0,0184	0,0230	0,0253	0,0265	0,0357	0,0403	0,0495	0,0530	0,0576	0,0703	0,0749	0,0877	0,0923
	280	0,0114	0,0171	0,0185	0,0228	0,0286	0,0315	0,0330	0,0444	0,0501	0,0617	0,0660	0,0717	0,0875	0,0932	0,1091	0,1148
	300	0,0122	0,0184	0,0199	0,0245	0,0306	0,0337	0,0353	0,0476	0,0537	0,0661	0,0707	0,0768	0,0938	0,0999	0,1169	0,1230
	325	0,0133	0,0199	0,0215	0,0265	0,0332	0,0365	0,0383	0,0515	0,0582	0,0716	0,0766	0,0832	0,1016	0,1082	0,1266	0,1333
	400	0,0163	0,0245	0,0265	0,0326	0,0408	0,0450	0,0471	0,0634	0,0716	0,0881	0,0942	0,1024	0,1250	0,1332	0,1558	0,1640
	425	0,0173	0,0260	0,0281	0,0347	0,0434	0,0478	0,0501	0,0674	0,0761	0,0936	0,1001	0,1088	0,1329	0,1415	0,1656	0,1743
	500	0,0204	0,0306	0,0331	0,0408	0,0510	0,0562	0,0589	0,0793	0,0895	0,1101	0,1178	0,1280	0,1563	0,1665	0,1948	0,2050
	525	0,0214	0,0321	0,0348	0,0428	0,0536	0,0590	0,0618	0,0833	0,0940	0,1156	0,1237	0,1344	0,1641	0,1748	0,2045	0,2153
	600	0,0245	0,0367	0,0397	0,0490	0,0612	0,0674	0,0707	0,0952	0,1074	0,1321	0,1414	0,1536	0,1876	0,1998	0,2338	0,2460
	625	0,0255	0,0383	0,0414	0,0510	0,0638	0,0703	0,0736	0,0991	0,1119	0,1376	0,1473	0,1600	0,1954	0,2081	0,2435	0,2563
	700	0,0286	0,0428	0,0463	0,0571	0,0714	0,0787	0,0825	0,1110	0,1253	0,1541	0,1649	0,1792	0,2188	0,2331	0,2727	0,2870
	725	0,0296	0,0444	0,0480	0,0592	0,0740	0,0815	0,0854	0,1150	0,1298	0,1596	0,1708	0,1856	0,2266	0,2414	0,2825	0,2973
	800	0,0326	0,0490	0,0530	0,0653	0,0816	0,0899	0,0942	0,1269	0,1432	0,1762	0,1885	0,2048	0,2501	0,2664	0,3117	0,3280
	825	0,0337	0,0505	0,0546	0,0673	0,0842	0,0927	0,0972	0,1308	0,1477	0,1817	0,1944	0,2112	0,2579	0,2747	0,3214	0,3383
	900	0,0367	0,0551	0,0596	0,0734	0,0918	0,1012	0,1060	0,1427	0,1611	0,1982	0,2120	0,2304	0,2813	0,2997	0,3506	0,3690
	925	0,0377	0,0566	0,0612	0,0755	0,0944	0,1040	0,1090	0,1467	0,1656	0,2037	0,2179	0,2368	0,2892	0,3080	0,3604	0,3793
	1000	0,0408	0,0612	0,0662	0,0816	0,1020	0,1124	0,1178	0,1586	0,1790	0,2202	0,2356	0,2560	0,3126	0,3330	0,3896	0,4100
	1025	0,0418	0,0627	0,0679	0,0836	0,1046	0,1152	0,1207	0,1626	0,1835	0,2257	0,2415	0,2624	0,3204	0,3413	0,3993	0,4203
	1120	0,0457	0,0685	0,0741	0,0914	0,1142	0,1259	0,1319	0,1776	0,2005	0,2466	0,2639	0,2867	0,3501	0,3730	0,4364	0,4592
	1200	0,0490	0,0734	0,0794	0,0979	0,1224	0,1349	0,1414	0,1903	0,2148	0,2642	0,2827	0,3072	0,3751	0,3996	0,4675	0,4920
	1225	0,0500	0,0750	0,0811	0,1000	0,1250	0,1377	0,1443	0,1943	0,2193	0,2697	0,2886	0,3136	0,3829	0,4079	0,4773	0,5023

Tab. 5.1.3. SVM PS 12,5

Dimen-sions		Efective area S_{ef} [m^2]															
		H															
		50	75	80	100	125	140	150	200	225	280	300	325	400	425	500	525
W	200	0,0066	0,0098	0,0105	0,0131	0,0164	0,0183	0,0197	0,0262	0,0295	0,0367	0,0393	0,0426	0,0524	0,0557	0,0655	0,0688
	225	0,0073	0,0110	0,0117	0,0147	0,0184	0,0206	0,0220	0,0294	0,0330	0,0411	0,0440	0,0477	0,0587	0,0624	0,0734	0,0771
	280	0,0089	0,0134	0,0143	0,0179	0,0224	0,0250	0,0268	0,0358	0,0402	0,0501	0,0536	0,0581	0,0715	0,0760	0,0894	0,0939
	300	0,0097	0,0146	0,0155	0,0194	0,0243	0,0272	0,0291	0,0388	0,0437	0,0544	0,0583	0,0631	0,0777	0,0825	0,0971	0,1020
	325	0,0105	0,0158	0,0168	0,0210	0,0263	0,0294	0,0315	0,0420	0,0473	0,0588	0,0630	0,0683	0,0840	0,0893	0,1050	0,1103
	400	0,0129	0,0193	0,0206	0,0257	0,0322	0,0360	0,0386	0,0515	0,0579	0,0721	0,0772	0,0837	0,1030	0,1094	0,1287	0,1351
	425	0,0137	0,0205	0,0219	0,0273	0,0342	0,0382	0,0410	0,0546	0,0615	0,0765	0,0820	0,0888	0,1093	0,1161	0,1366	0,1434
	500	0,0160	0,0240	0,0256	0,0321	0,0401	0,0449	0,0481	0,0641	0,0721	0,0898	0,0962	0,1042	0,1282	0,1363	0,1603	0,1683
	525	0,0168	0,0252	0,0269	0,0336	0,0421	0,0471	0,0505	0,0673	0,0757	0,0942	0,1009	0,1093	0,1346	0,1430	0,1682	0,1766

Tab. 5.1.4. SVM PS 20

Dimen-sions		Efective area S_{ef} [m^2]															
		H															
		50	75	80	100	125	140	150	200	225	280	300	325	400	425	500	525
W	200	0,0079	0,0119	0,0127	0,0159	0,0198	0,0222	0,0238	0,0317	0,0357	0,0444	0,0476	0,0515	0,0634	0,0674	0,0793	0,0833
	225	0,0090	0,0134	0,0143	0,0179	0,0224	0,0251	0,0269	0,0358	0,0403	0,0501	0,0537	0,0582	0,0716	0,0761	0,0895	0,0940
	280	0,0110	0,0165	0,0176	0,0220	0,0275	0,0308	0,0330	0,0440	0,0495	0,0617	0,0661	0,0716	0,0881	0,0936	0,1101	0,1156
	300	0,0118	0,0177	0,0188	0,0236	0,0295	0,0330	0,0353	0,0471	0,0530	0,0660	0,0707	0,0766	0,0942	0,1001	0,1178	0,1237
	325	0,0128	0,0192	0,0205	0,0256	0,0320	0,0358	0,0384	0,0512	0,0576	0,0717	0,0768	0,0832	0,1024	0,1088	0,1280	0,1344
	400	0,0156	0,0234	0,0250	0,0313	0,0391	0,0438	0,0469	0,0625	0,0703	0,0875	0,0938	0,1016	0,1250	0,1329	0,1563	0,1641
	425	0,0167	0,0250	0,0266	0,0333	0,0416	0,0466	0,0500	0,0666	0,0749	0,0932	0,0999	0,1082	0,1332	0,1415	0,1665	0,1748
	500	0,0195	0,0292	0,0312	0,0390	0,0487	0,0545	0,0584	0,0779	0,0877	0,1091	0,1169	0,1266	0,1558	0,1656	0,1948	0,2045
	525	0,0205	0,0308	0,0328	0,0410	0,0513	0,0574	0,0615	0,0820	0,0923	0,1148	0,1230	0,1333	0,1640	0,1743	0,2050	0,2153

Tab. 5.1.5. SVM NS

Dimen-sions		Efective area S_{ef} [m^2]															
		H															
		50	75	80	100	125	140	150	200	225	280	300	325	400	425	500	525
W	200	0,0079	0,0119	0,0127	0,0159	0,0198	0,0222	0,0238	0,0317	0,0357	0,0444	0,0476	0,0515	0,0634	0,0674	0,0793	0,0833
	225	0,0090	0,0134	0,0143	0,0179	0,0224	0,0251	0,0269	0,0358	0,0403	0,0501	0,0537	0,0582	0,0716	0,0761	0,0895	0,0940
	280	0,0110	0,0165	0,0176	0,0220	0,0275	0,0308	0,0330	0,0440	0,0495	0,0617	0,0661	0,0716	0,0881	0,0936	0,1101	0,1156
	300	0,0118	0,0177	0,0188	0,0236	0,0295	0,0330	0,0353	0,0471	0,0530	0,0660	0,0707	0,0766	0,0942	0,1001	0,1178	0,1237
	325	0,0128	0,0192	0,0205	0,0256	0,0320	0,0358	0,0384	0,0512	0,0576	0,0717	0,0768	0,0832	0,1024	0,1088	0,1280	0,1344
	400	0,0156	0,0234	0,0250	0,0313	0,0391	0,0438	0,0469	0,0625	0,0703	0,0875	0,0938	0,1016	0,1250	0,1329	0,1563	0,1641
	425	0,0167	0,0250	0,0266	0,0333	0,0416	0,0466	0,0500	0,0666	0,0749	0,0932	0,0999	0,1082	0,1332	0,1415	0,1665	0,1748
	500	0,0195	0,0292	0,0312	0,0390	0,0487	0,0545	0,0584	0,0779	0,0877	0,1091	0,1169	0,1266	0,1558	0,1656	0,1948	0,2045
	525	0,0205	0,0308	0,0328	0,0410	0,0513	0,0574	0,0615	0,0820	0,0923	0,1148	0,1230	0,1333	0,1640	0,1743	0,2050	0,2153
	600	0,0233	0,0350	0,0373	0,0467	0,0583	0,0653	0,0700	0,0933	0,1050	0,1306	0,1400	0,1516	0,1866	0,1983	0,2333	0,2450
	625	0,0244	0,0365	0,0390	0,0487	0,0609	0,0682	0,0731	0,0974	0,1096	0,1364	0,1461	0,1583	0,1948	0,2070	0,2435	0,2557
	700	0,0272	0,0408	0,0435	0,0544	0,0680	0,0761	0,0815	0,1087	0,1223	0,1522	0,1631	0,1767	0,2174	0,2310	0,2718	0,2854
	725	0,0282	0,0423	0,0451	0,0564	0,0705	0,0790	0,0846	0,1128	0,1269	0,1579	0,1692	0,1833	0,2256	0,2397	0,2820	0,2961
	800	0,0310	0,0465	0,0496	0,0621	0,0776	0,0869	0,0931	0,1241	0,1396	0,1738	0,1862	0,2017	0,2482	0,2638	0,3103	0,3258
	825	0,0321	0,0481	0,0513	0,0641	0,0801	0,0897	0,0962	0,1282	0,1442	0,1795	0,1923	0,2083	0,2564	0,2724	0,3205	0,3365
	900	0,0349	0,0523	0,0558	0,0698	0,0872	0,0977	0,1046	0,1395	0,1570	0,1953	0,2093	0,2267	0,2790	0,2965	0,3488	0,3662
	925	0,0359	0,0539	0,0574	0,0718	0,0898	0,1005	0,1077	0,1436	0,1616	0,2010	0,2154	0,2334	0,2872	0,3052	0,3590	0,3770
	1000	0,0387	0,0581	0,0620	0,0775	0,0968	0,1084	0,1162	0,1549	0,1743	0,2169	0,2324	0,2517	0,3098	0,3292	0,3873	0,4067
	1025	0,0398	0,0596	0,0636	0,0795	0,0994	0,1113	0,1193	0,1590	0,1789	0,2226	0,2385	0,2584	0,3180	0,3379	0,3975	0,4174
	1120	0,0434	0,0650	0,0694	0,0867	0,1084	0,1214	0,1301	0,1734	0,1951	0,2428	0,2601	0,2818	0,3468	0,3685	0,4335	0,4552
	1200	0,0464	0,0696	0,0743	0,0929	0,1161	0,1300	0,1393	0,1857	0,2089	0,2600	0,2786	0,3018	0,3714	0,3947	0,4643	0,4875
	1225	0,0475	0,0712	0,0759	0,0949	0,1186	0,1329	0,1424	0,1898	0,2135	0,2657	0,2847	0,3084	0,3796	0,4033	0,4745	0,4982

6. Calculation and determination values

Fig. 29 Flow not influenced by ceiling

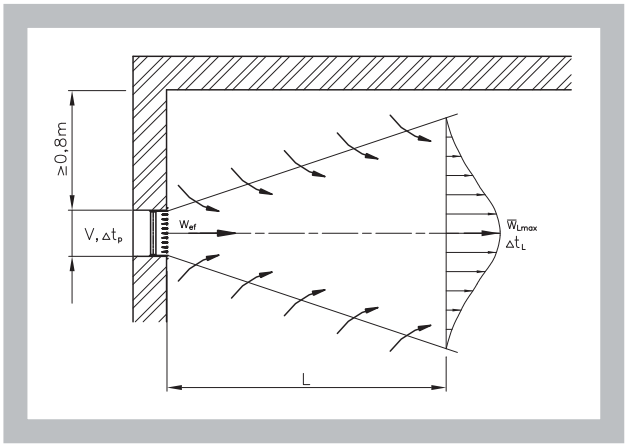

Fig. 30 Flow influenced by ceiling

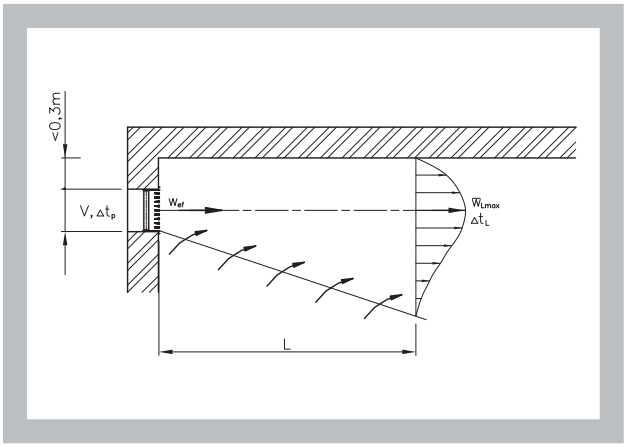

Fig. 31 Air flow deflection in non-isothermal flow

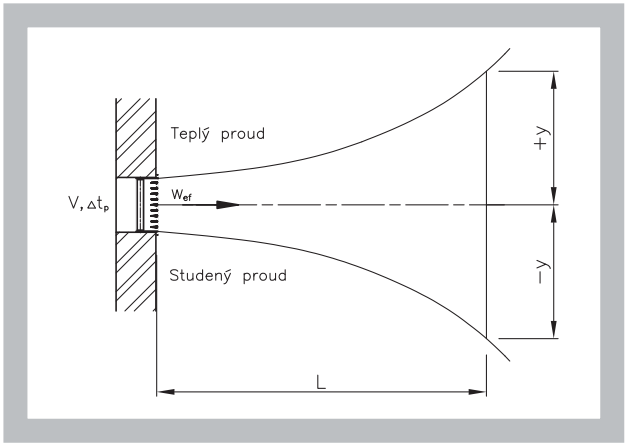

Fig. 32 Blade adjustment angle α and air-flow opening angle γ

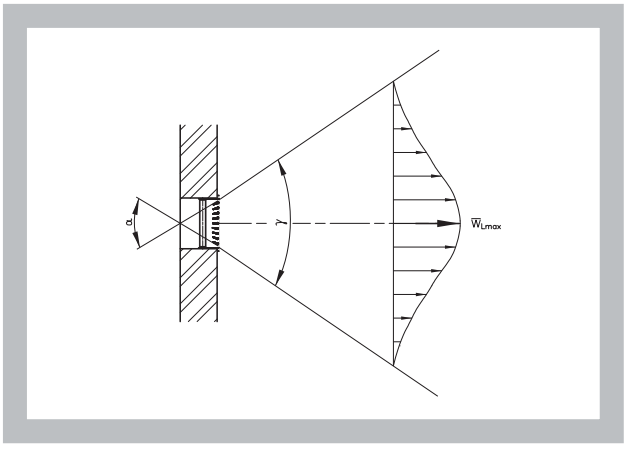

$\dot{V}$	[m³.h⁻¹]	volumetric air flow for one vent
Δp_c	[Pa]	total pressure loss at ρ= 1,2 kg.m⁻³
w_{ef}	[m.s⁻¹]	effective velocity
L_{WA}	[dB(A)]	acoustic power level
S_{ef}	[m²]	effective vent area
L	[m]	flow length
w_L	[m.s⁻¹]	air flow velocity in L distance
Δt_p	[K]	difference between inlet air temperature and room air temperature
Δt_L	[K]	difference between room air temperature and the air temperature in flow
y	[m]	air flow axis deflection
α	[°]	vent blade adjustment angle
γ	[°]	air-flow opening angle

Effective velocity w_{ef}

w_{ef} [m.s⁻¹] = ($\dot{V}$ [m³.h⁻¹] / 3600) / S_{ef} [m²]

7. Ventilation values

7.1. Acoustic powers level and pressure losses

Diagram 7.1.1. SVM P 20 with R1 regulation - inlet

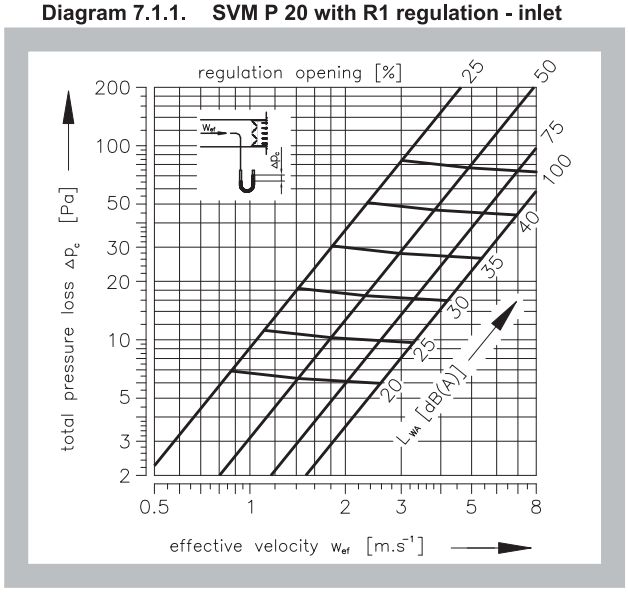

Diagram 7.1.2. SVM P 12,5 with R1 regulation - inlet

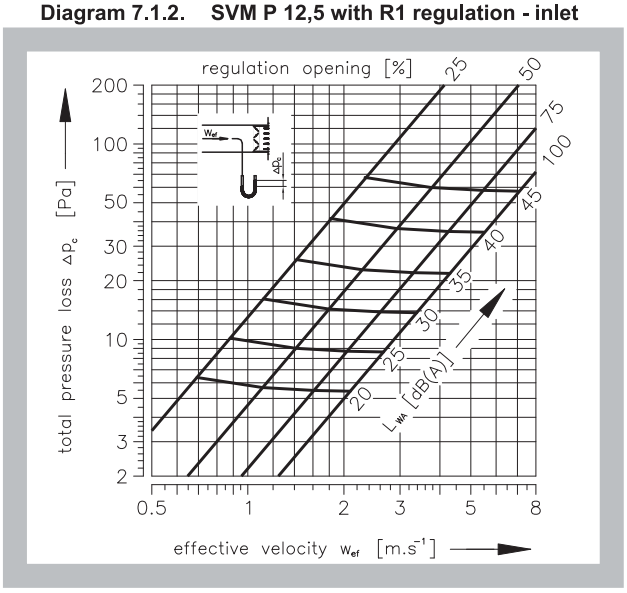

Diagram 7.1.3. SVM N with R1 regulation - inlet

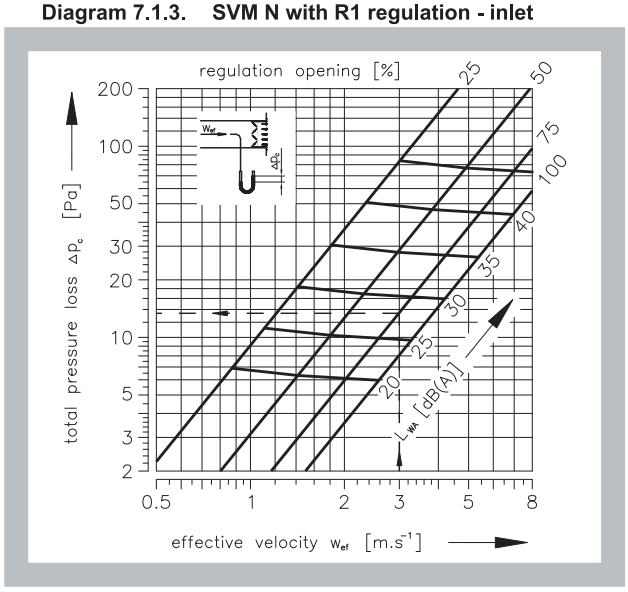

The same values as for 100% regulation opening apply to vents without regulation.

7.2. Maximum temperature difference $\Delta t_{p\,max}$ in cooling

Diagram 7.2.1. $\Delta t_{p\,max}$ in cooling

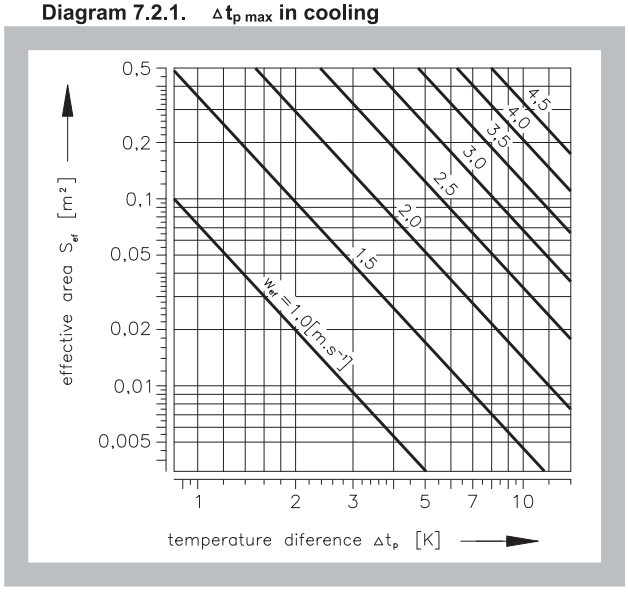

Provided the maximum temperature difference $\Delta t_{p\,max}$ (for given vent effective area S_{ef} and effective velocity w_{ef}) is exceeded in cooling, air flow does not adhere to the ceiling.

7.3. Air-flow velocity, flow length in isothermal flow and air-flow axis deflection

Diagram 7.3.1. Air-flow velocity, flow length in isothermal flow - flow not influenced by ceiling

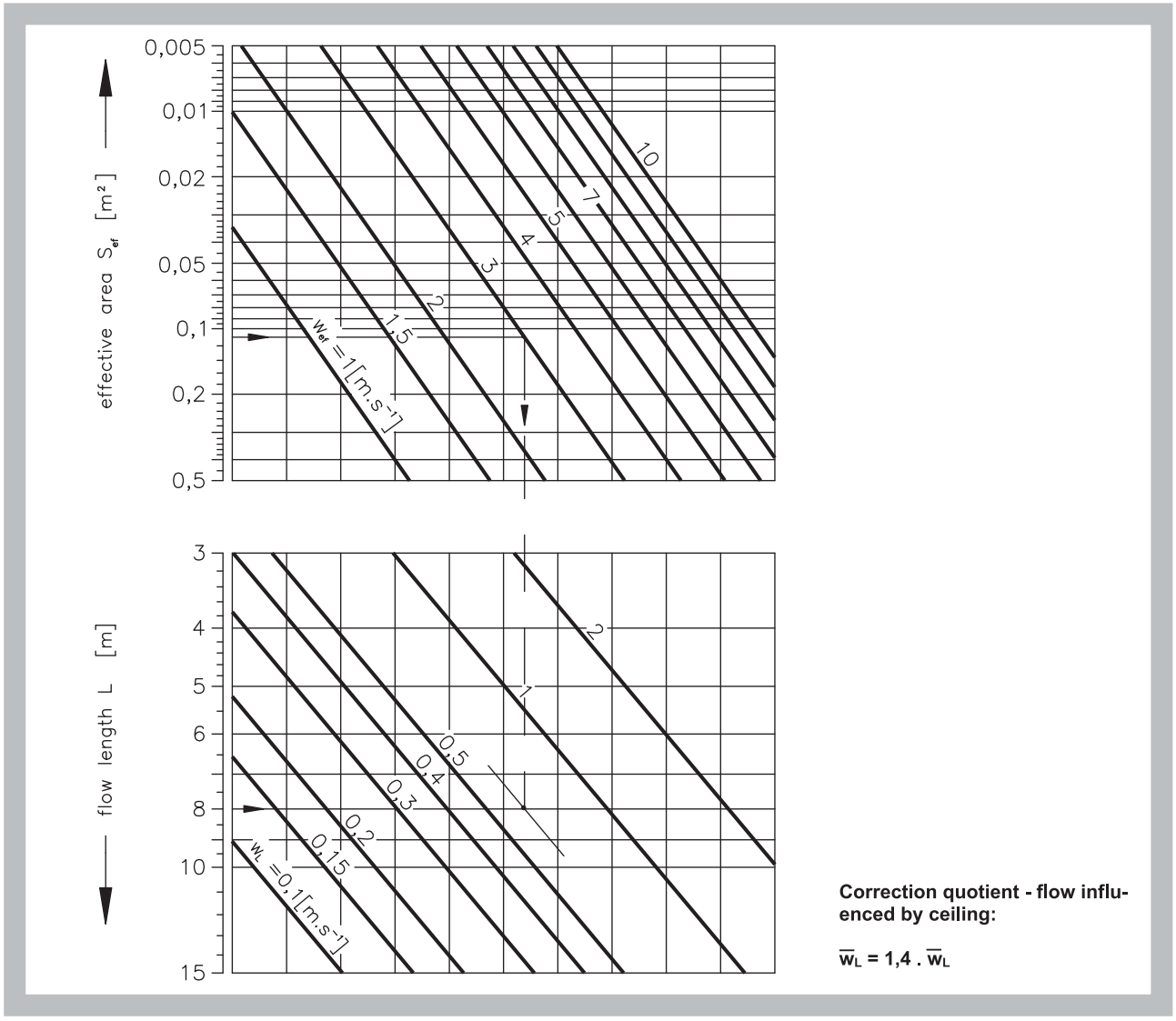

Correction quotient - flow influenced by ceiling:

$\overline{w}_L = 1{,}4 \,.\, \overline{w}_L$

Diagram 7.3.2. Air-flow axis deflection

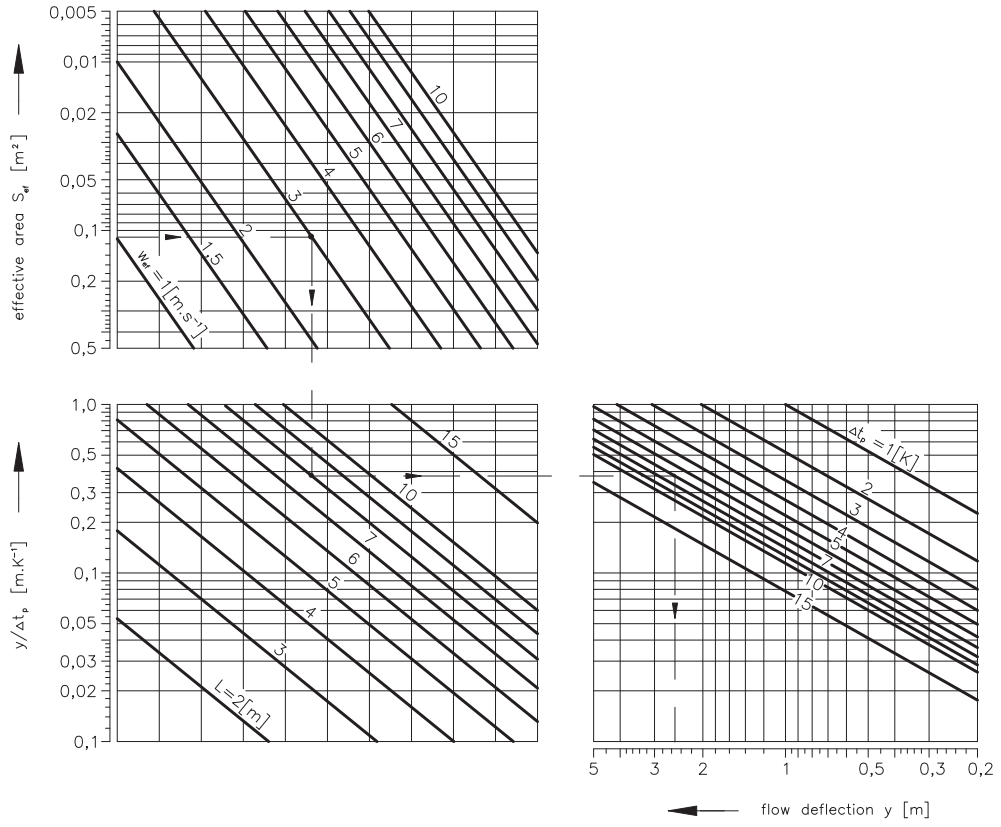

Fig. 33 Example

Given data:	Vent SVM NV 500 x 280 with regulation - inlet (regulation opening 75%, blade adjustment angle α = 0°), flow not influenced by ceiling
	$\mathring{V}$ = 1200 $m^3.h^{-1}$
	$\overline{w}_{L\,max}$ = 0,6 $m.s^{-1}$
	Δt_p = 7 K
Tab. 5.1.2. :	S_{ef} = 0,11 m^2
Calculation:	W_{ef} = (V / 3600) / S_{ef} = (1200 / 3600) / 0,11 = 3 $m.s^{-1}$
Diagram 7.1.1. :	Δp_c = 13,5 Pa
	L_{WA} = 28 dB(A)
Diagram 7.3.1. :	L = 8 m
Diagram 7.3.2. :	y = 2,6 m

IV. ORDERING INFORMATION

8. Ordering key

SVM NS 500x280 R1/S TPM 016/01

- TPM 016/01 – technical specification
- R1/S
  - \- – concealed fastening (spring clips)
  - S – screwed fastening
- R1
  - \- – fixing frame UR without fixtures
  - UR2 – fixing frame with immured fixtures
  - R1 – with regulation R1
- 500x280 – nominal dimensions
- NS
  - PV12,5 – fixed with horizontal blades, blades pitch 12,5 mm
  - PV20 – fixed with horizontal blades, blades pitch 20 mm
  - PS12,5 – fixed with vertical blades, blades pitch 12,5 mm
  - PS20 – fixed with vertical blades, blades pitch 20 mm
  - NV – adjustable with horizontal blades
  - NS – adjustable with vertical blades
- SVM – type

Adapted fixing frame for installation in the gypsum constructions is necessary describe separately.
Vents without fixing frame UR, UR2 or regulation R1 is necessary describe separately.

V. MATERIAL, FINISHING

9. Material

9.1. The components of vents are made of drawn aluminium sections. Section surfaces are eloxal coated.

9.2. Fixing frames are made of galvanized sheet. Spring clips are made of spring steel with galvanized surface.

9.3. The sealing along the grille perimeter is made of plastic foam self-adhesive tape.

VI. INSTALATION

10. Assemly and disassembly

10.1. Vents with concealed fastening - assembly

Delivery components of the grilles are the spring clips (up to an grille width of 750 mm, 4 units; more than 750 mm, 8 units) and the seal.

1) Install the regulation R1 or the fixation frame UR2, UR, or if required, the atypical frame furnished with an edge for gripping the spring clips (see Fig. 18 - detail of the leaf on the fixation frame).
2) If a regulation is installed, adjust the air flow through the vent.
3) On vents with adjustable lamellas, set the position of the front row of leaves.
4) Place the vent into the body of the control or fixation frame, press the spring clips and push in the vent. The tongues of the spring clips will grip the edge of the frame.

Fig. 34 Vents with concealed fastening - assembly

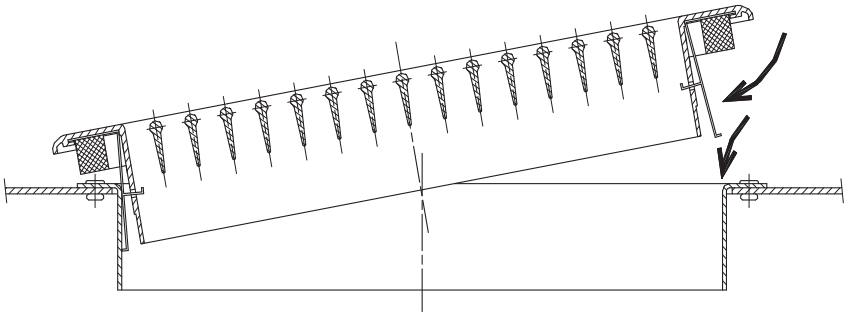

10.2. Vents with concealed fastening - disassembly

1) With a screwdriver (through the openings between the lamellas of the vent), press beyond the jutting-out the tongues of the spring clips from the edge of the frame.
2) Take out the outlet.

Fig. 35 Vents with concealed fastening - disassembly

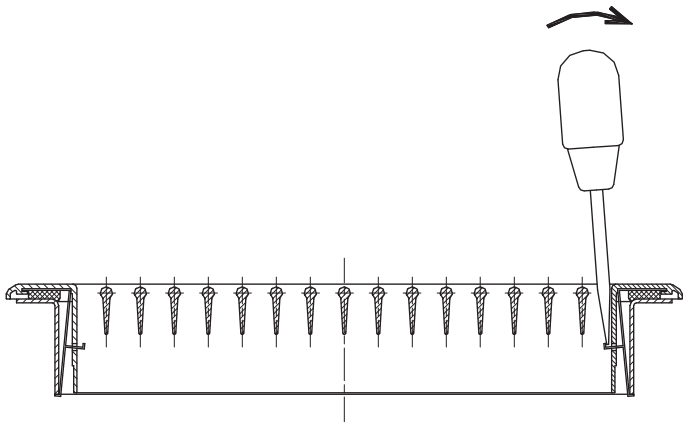

10.3. Vents with screwed fastening - assembly

Delivery components of the grilles are screws, covers and seal.

1) Install the control R1 or the fixation frame UR, UR2 (opening for screws have to remain free).
2) If a control is installed, adjust the flow of air through the vent.
3) On vents with adjustable lamellas, set the position of the front row of leaves.
4) Place the vent into the body of the control or fixation frame and secure the screws.

10.4. Vents with screwed fastening - disassembly

1) Unscrew the screws.
2) Take out the vent.

VII. PACKING, TRANSPORTATION, TAKE-OVER, STORAGE AND GUARANTEE

11. Logistic terms

11.1. Grilles are supplied packed in shrinking foil. While transported and stored they must be protected against mechanical damage and weather conditions.

11.2. If no method of take-over is mentioned in the order, handing the goods over to the carrier will be considered as a take-over.

11.3. Grilles have to be stored in closed premises, in the environment without aggressive steams, gases and dusts. Temperature range have to be from -5 to +40°C and relative humidity max. 80%.

12. Guarantee

12.1. The manufacturer provides a guarantee to the cover grilles for the period of 24 months from the date of shipment.

TPM 009/00
Revision 5
Valid from 22/11/18

MANDÍK®

REGULATION DAMPER

RKM

These technical conditions define the range of produced dimensions and versions of "REGULATION DAMPER RKM"("damper"). These technical conditions apply to the manufacture, design, ordering, assembly, operation and maintenance.

I. CONTENT

II. GENERAL **2**

1. Description..... 2

2. Design..... 2

3. Dimensions and weights..... 3

4. Placement and installation..... 5

III. TECHNICAL DATA **6**

5. Basic parametrs..... 6

6. Electrical elements, wiring diagram..... 6

7. Pressure lost, flow characteristic..... 12

8. Noise data..... 13

IV. ORDERING INFORMATION **13**

9. Ordering key..... 13

V. MATERIAL, FINISHING **13**

10. Material..... 14

VI. INSPECTION, TESTING **14**

11. Inspection..... 14

12. Testing..... 14

VII. PACKING, TRANSPORT AND STORAGE **14**

13. Logistical data..... 14

VIII. ASSEMBLY **14**

14. Assembly..... 14

II. GENERAL

1. Description

1.1. The dampers consist of a frame, blades and a control actuator. They are used to control the air flow by choking the flow.

1.2. Dampers are not tight across blade. Tightness across the body in accordance with EN 1751, class C.

1.3. The dampers are destined for maximal velocity of air flow 12 $m.s^{-1}$.

1.4. The dampers are intended for environment protected against weather impacts with the classification of climatic conditions class 3K5, without condensation, frost, ice formation, and without water even from other sources than rain according to EN 60 72133, change A2, with temperature range from 0°C to +40°C.

If the electrical elements are mounted on the damper, temperature range is narrowed by the electrical elements.

1.5. If is not noticed other way, all dimensions and weight are in millimeters and kilograms.

2. Design

2.1. Versions of dampers are shown in the table Tab. 2.1.1. The version is designated by two digits following the TP mark.

Tab. 2.1.1. Version of damper

Version of damper – type of control	Two digits following the TP mark
Manually controlled	.01
to fit actuator drive	.09
Actuator with emergency function 230V	.43*
Actuator controlled 230V, two point regulation - without position signal	.45
Actuator controlled 230V, two point regulation - with position signal	.46
Actuator with emergency function 230V - with position signal	.48*
Actuator with emergency function 24V	.53*
Actuator controlled 24V, two point regulation - without position signal	.55
Actuator controlled 24V, two point regulation - with position signal	.56
Actuator controlled 24V SR with smooth regulation	.57
Actuator with emergency function 24V - with position signal	.58*

*** design is available on request, is necessary to specify the position of the damper blade (open or closed) without voltage.**

Fig. 1 damper with actuating mechanism

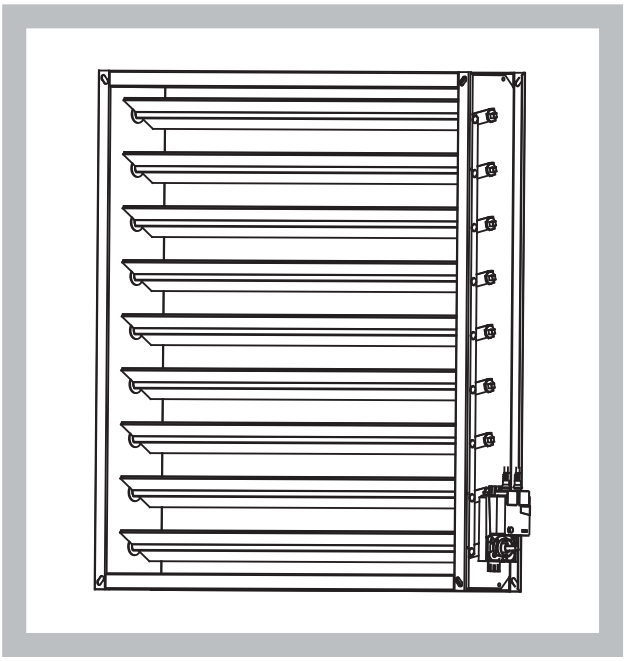

3. Dimensions and weights

3.1. Dimensions, range of dimensions, airflow (effective) area

Tab. 3.1.1. Dimensions, range of dimensions, weight, airflow (effective) area

A x B	Number of blades	Sef [m²]	Weight [kg]	A x B	Number of blades	Sef [m²]	Weight [kg]
200 x 200	2	0,036	2,9	**500 x 400**	4	0,180	7,4
250	2	0,036	3,4	**500**	5	0,225	8,5
315	3	0,054	3,9	**630**	6	0,270	10,3
400	4	0,072	4,5	**800**	8	0,360	12,3
500	5	0,090	5,3	**1000**	10	0,450	14,7
250 x 200	2	0,045	3,3	**1250**	12	0,540	18,0
250	2	0,045	3,9	**630 x 200**	2	0,113	6,2
315	3	0,068	4,3	**250**	2	0,113	7,1
400	4	0,090	5,0	**315**	3	0,170	7,8
500	5	0,113	5,8	**400**	4	0,227	8,6
630	6	0,135	7,0	**500**	5	0,284	10,0
315 x 200	2	0,057	3,7	**630**	6	0,340	12,0
250	2	0,057	4,4	**800**	8	0,454	14,3
315	3	0,085	4,9	**1000**	10	0,567	17,0
400	4	0,113	5,6	**1250**	12	0,680	21,0
500	5	0,142	6,5	**1400**	14	0,794	23,0
630	6	0,170	7,9	**800 x 200**	2	0,144	8,2
800	8	0,227	9,6	**250**	2	0,144	9,0
400 x 200	2	0,072	4,3	**315**	3	0,216	9,6
250	2	0,072	5,1	**400**	4	0,288	10,6
315	3	0,108	5,7	**500**	5	0,360	12,2
400	4	0,144	6,4	**630**	6	0,432	14,6
500	5	0,180	7,4	**800**	8	0,576	17,0
630	6	0,216	9,0	**1000**	10	0,720	20,0
800	8	0,288	10,8	**1250**	12	0,864	24,5
1000	10	0,360	13,0	**1400**	14	1,008	27,0
500 x 200	2	0,090	5,0	**1600**	16	1,152	30,0
250	2	0,090	6,0	**1800**	18	1,296	33,0
315	3	0,135	6,6	**2000**	20	1,440	36,0

A x B	Number of blades	S_{ef} [m^2]	Weight [kg]	A x B	Number of blades	S_{ef} [m^2]	Weight [kg]
1000 x 200	2	0,180	9,8	**1400 x 1400**	14	1,714	46,0
250	2	0,180	11,0	**1600**	16	1,958	51,5
315	3	0,270	11,7	**1800**	18	2,203	57,0
400	4	0,360	12,5	**2000**	20	2,448	62,5
500	5	0,450	14,3	**1600 x 630**	6	0,842	28,5
630	6	0,540	17,5	**800**	8	1,123	33,0
800	8	0,720	20,0	**1000**	10	1,404	39,0
1000	10	0,900	23,5	**1250**	12	1,685	47,5
1250	12	1,080	29,0	**1400**	14	1,966	51,0
1400	14	1,260	31,5	**1600**	16	2,246	57,0
1600	16	1,440	35,0	**1800**	18	2,527	63,0
1800	18	1,620	38,5	**2000**	20	2,808	69,0
2000	20	1,800	42,0	**1800 x 630**	6	0,950	31,0
1250 x 400	4	0,450	15,0	**800**	8	1,267	35,5
500	5	0,563	17,0	**1000**	10	1,584	42,0
630	6	0,675	20,5	**1250**	12	1,901	51,5
800	8	0,900	23,5	**1400**	14	2,218	55,0
1000	10	1,125	27,5	**1600**	16	2,534	61,5
1250	12	1,350	34,0	**1800**	18	2,851	68,0
1400	14	1,575	37,0	**2000**	20	3,168	74,5
1600	16	1,800	41,0	**2000 x 800**	8	1,411	39,0
1800	18	2,025	45,0	**1000**	10	1,764	46,0
2000	20	2,250	49,0	**1250**	12	2,117	55,0
1400 x 500	5	0,612	21,5	**1400**	14	2,470	60,0
630	6	0,734	26,0	**1600**	16	2,822	67,0
800	8	0,965	29,5	**1800**	18	3,175	74,0
1000	10	1,224	35,0	**2000**	20	3,528	81,0
1250	12	1,469	43,0				

S_{ef} - effective area for fully opened damper.
The weights listed in the table are valid for the basic version (manually controlled). The weight of the servo actuator must be added to all other versions − see table 6.1.1.
Atypical dimensions of the damper must be discussed with the manufacturer in advance.

Fig. 2 Manually controlled damper without divider (for A < 1300) without reinforcing bolt (for B < 1200)

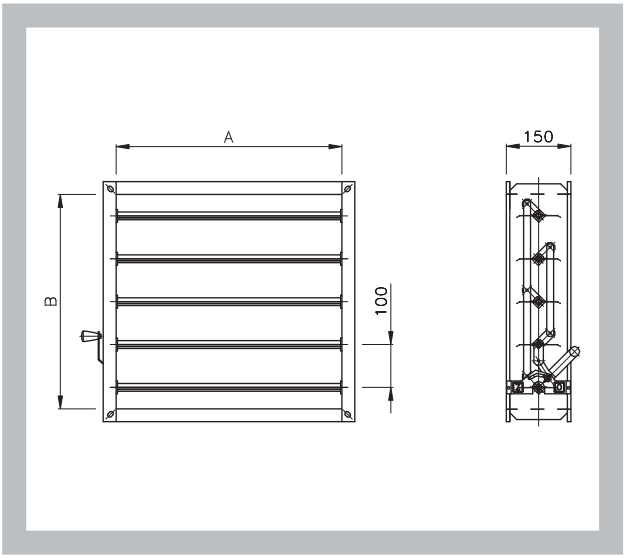

Fig. 3 Actuator controlled damper without divider (for A < 1300) without reinforcing bolt (for B < 1200)

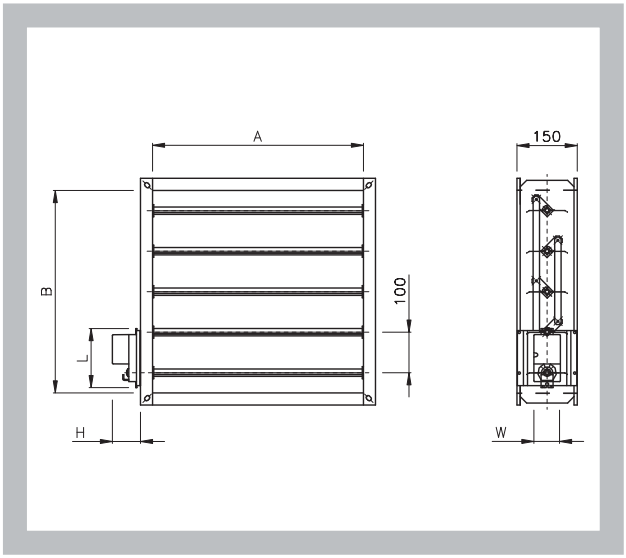

Fig. 4 Manually controlled damper with divider (for A ≥ 1300) with reinforcing bolt (for B ≥ 1200)

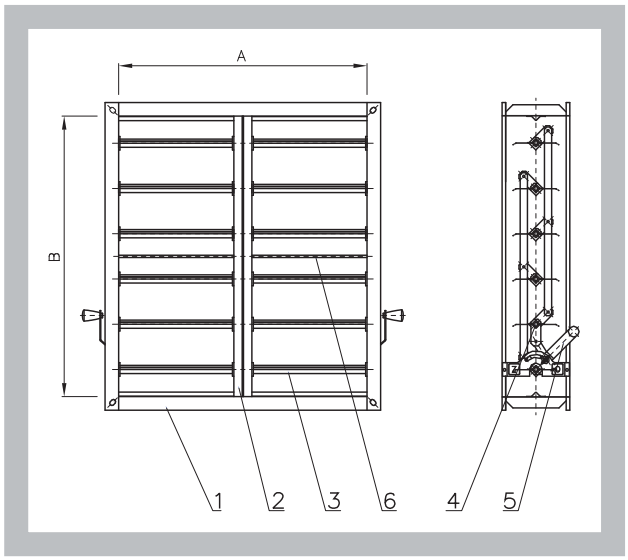

Fig. 5 Actuator controlled damper with divider (for A ≥ 1300) with reinforcing bolt (for B ≥ 1200)

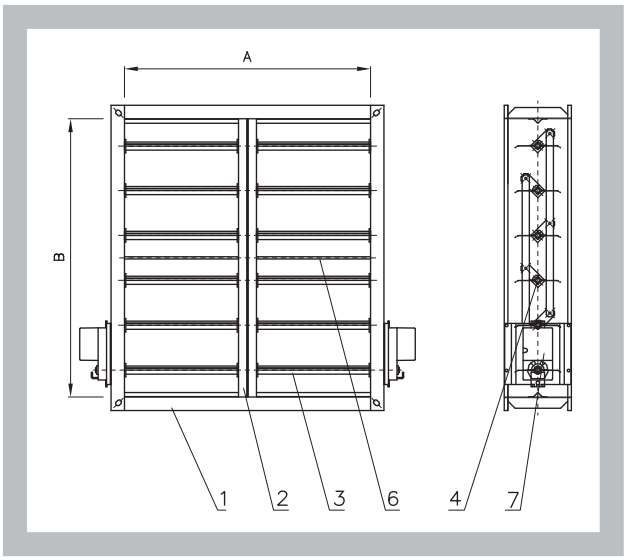

Item:

1. body of damper
2. divider (only for dampers where A ≥ 1300 mm)
3. blade
4. control actuator
5. control rod
6. reinforcing bolt (only for damper where B ≥ 1200 mm)
7. actuating mechanism

Fig. 6 Detail of flange

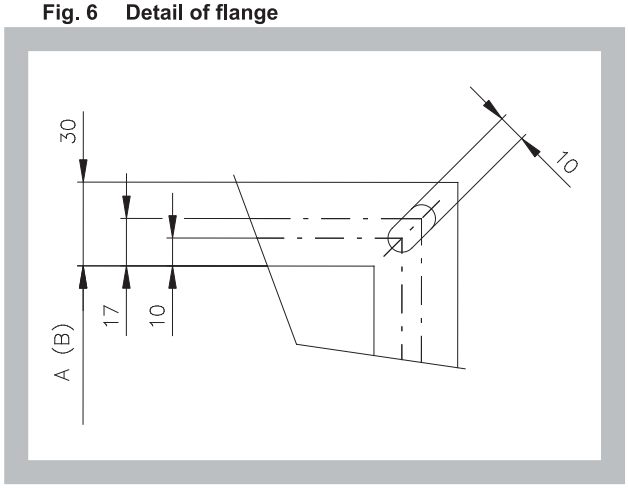

3.2. Atypical dimensions regulating valve must first be discussed with the manufacturer.

3.3. Dampers to install servo drive unit are provided square−shaped pin of cross−section 8x8 mm, which the servo drive unit is fitted on directly or using a reducer. The pin is overlapping the damper flange by 60 mm.

4. Placement and installation

4.1. The dampers are designed to be installed into the air duct. The flaps can be used in any orientation.

4.2. The actuator requires a 250 mm clearance (minimum).

III. TECHNICAL DATA

5. Basic parameters

5.1. Maximum pressure difference on control dampers

Tab. 5.1.1. Maximum pressure difference

Maximum pressure difference Δp [Pa]													
A/B	**200**	**250**	**315**	**400**	**500**	**630**	**800**	**1000**	**1250**	**1400**	**1600**	**1800**	**2000**
200	1500	1500	1500	1500	1500	x	x	x	x	x	x	x	x
250	1500	1500	1500	1500	1500	1500	x	x	x	x	x	x	x
315	1500	1500	1500	1500	1500	1500	1500	x	x	x	x	x	x
400	1500	1500	1500	1500	1500	1500	1500	1500	x	x	x	x	x
500	1500	1500	1500	1500	1500	1500	1500	1500	1500	x	x	x	x
630	1500	1500	1500	1500	1500	1500	1500	1500	1500	1200	x	x	x
800	1500	1500	1500	1500	1500	1500	1500	1500	1500	1200	1200	1200	1200
1000	1500	1500	1500	1500	1500	1500	1500	1500	1500	1200	1200	1200	1200
1250	x	x	x	1200	1200	1200	1200	1200	1200	1200	1200	1200	1200
1400	x	x	x	x	1200	1200	1200	1200	1200	1200	1200	1200	1200
1600	x	x	x	x	x	1200	1200	1200	1200	1200	1200	1200	1200
1800	x	x	x	x	x	1200	1200	1200	1200	1200	1200	1200	1200
2000	x	x	x	x	x	x	1200	1200	1200	1200	1200	1200	1200

6. Electrical elements, wiring diagram

6.1. Types and weights of servo actuators for control of dampers

Tab. 6.1.1. Type of actuator for individually dampers

Type of servo actuator	Position signal	Emergency functions	Torque	Weight of actuator [kg]	Dimensions L x H x W
Belimo LM 230A-S (.46)	YES	NO	5 Nm	0,6	116 x 61 x 66
Belimo LM 230A (.45)	NO	NO		0,5	
Belimo LM 24A-S (.56)	YES	NO		0,6	
Belimo LM 24A (.55)	NO	NO		0,5	
Belimo LM 24A-SR (.57)	YES	NO		0,5	
Belimo NM 230A-S (.46)	YES	NO	10 Nm	0,85	124 x 62 x 80
Belimo NM 230A (.45)	NO	NO		0,8	
Belimo NM 24A-S (.56)	YES	NO		0,85	
Belimo NM 24A (.55)	NO	NO		0,75	
Belimo NM 24A-SR (.57)	YES	NO		0,8	
Belimo SM 230A-S (.46)	YES	NO	20 Nm	1,1	139 x 64 x 88
Belimo SM 230A (.45)	NO	NO		1,05	
Belimo SM 24A-S (.56)	YES	NO		1,05	
Belimo SM 24A (.55)	NO	NO		1	
Belimo SM 24A-SR (.57)	YES	NO		1,05	
Belimo LF 230A (.43)	NO	YES	4 Nm	1,7	130 x 82 x 98
Belimo LF 230A-S (.48)	YES	YES		1,8	
Belimo LF 24A (.53)	NO	YES		1,5	
Belimo LF 24A-S (.58)	YES	YES		1,6	
Belimo NFA (.43)	NO	YES	10 Nm	1,8	182 x 93 x 98
Belimo NFA-S2 (.48)	YES	YES		1,9	
Belimo NF 24A (.53)	NO	YES		2,1	
Belimo NF 24A-S2(.58)	YES	YES		2,3	
Belimo SFA (.43)	NO	YES	20 Nm	1,7	182 x 93 x 98
Belimo SFA-S2 (.48)	YES	YES		2	
Belimo SF 24A (.53)	NO	YES		2,3	
Belimo SF 24A-S2 (.58)	YES	YES		2,4	

Tab. 6.1.2. The type and number of actuators for damper size - standard servo / actuator with emergency function

RKM		A												
		200	250	315	400	500	630	800	1000	1250	1400	1600	1800	2000
B	200	LM/LF	LM/LF	LM/LF	LM/LF	LM/LF	LM/LF	LM/LF	LM/LF	x	x	x	x	x
	250	LM/LF	LM/LF	LM/LF	LM/LF	LM/LF	LM/LF	LM/LF	LM/LF	x	x	x	x	x
	315	LM/LF	LM/LF	LM/LF	LM/LF	LM/LF	LM/LF	LM/NF	LM/NF	x	x	x	x	x
	400	LM/LF	LM/LF	LM/LF	LM/LF	LM/LF	LM/NF	LM/NF	LM/NF	NM/NF	x	x	x	x
	500	NM/NF	NM/NF	NM/NF	NM/NF	NM/NF	NM/NF	NM/NF	NM/NF	NM/NF	2xNM/ 2xNF	x	x	x
	630	NM/NF	NM/NF	NM/NF	NM/NF	NM/NF	NM/NF	NM/NF	NM/NF	NM/NF	2xNM/ 2xNF	2xNM/ 2xNF	2xNM/ 2xNF	x
	800	NM/NF	NM/NF	NM/NF	NM/NF	NM/NF	NM/NF	NM/NF	NM/NF	SM/SF	2xNM/ 2xNF	2xNM/ 2xNF	2xNM/ 2xNF	2xNM/ 2xNF
	1000	SM/SF	SM/SF	SM/SF	SM/SF	SM/SF	SM/SF	SM/SF	SM/SF	SM/SF	2xSM/ 2xSF	2xSM/ 2xSF	2xSM/ 2xSF	2xSM/ 2xSF
	1250	x	x	x	x	SM/SF	SM/SF	SM/SF	SM/SF	SM/SF	2xSM/ 2xSF	2xSM/ 2xSF	2xSM/ 2xSF	2xSM/ 2xSF
	1400	x	x	x	x	x	SM/SF	SM/SF	SM/SF	SM/SF	2xSM/ 2xSF	2xSM/ 2xSF	2xSM/ 2xSF	2xSM/ 2xSF
	1600	x	x	x	x	x	x	SM/SF	SM/SF	SM/SF	2xSM/ 2xSF	2xSM/ 2xSF	2xSM/ 2xSF	2xSM/ 2xSF
	1800	x	x	x	x	x	x	SM/SF	SM/SF	SM/SF	2xSM/ 2xSF	2xSM/ 2xSF	2xSM/ 2xSF	2xSM/ 2xSF
	2000	x	x	x	x	x	x	SM/SF	SM/SF	SM/SF	2xSM/ 2xSF	2xSM/ 2xSF	2xSM/ 2xSF	2xSM/ 2xSF

6.2. Supply voltage and power inputs

Tab. 6.2.1. Supply voltage and power input

Type of actuator	Supply voltage	Power input		
		In operation	Resting position	Dimensioning
LM 230A, LM 230A-S	AC 100 ... 240 V, 50/60 Hz	1,5 W	0,4 W	4 VA
LM 24A, LM 24A-S	AC 24 V, 50/60 Hz; DC 24 V	1 W	0,2 W	2 VA
LM 24A-SR	AC 24 V, 50/60 Hz; DC 24 V	1 W	0,4 W	2 VA
NM 230A, NM 230A-S	AC 100 ... 240 V, 50/60 Hz	2,5 W	0,6 W	6 VA
NM 24A, NM 24A-S	AC 24 V, 50/60 Hz; DC 24 V	1,5 W	0,2 W	3,5 VA
NM 24A-SR	AC 24 V, 50/60 Hz; DC 24 V	2 W	0,4 W	4 VA
SM 230A, SM 230A-S	AC 100 ... 240 V, 50/60 Hz	2,5 W	0,6 W	6 VA
SM 24A, SM 24A-S	AC 24 V, 50/60 Hz; DC 24 V	2 W	0,2 W	4 VA
SM 24A-SR	AC 24 V, 50/60 Hz; DC 24 V	2 W	0,4 W	4 VA
LF 230, LF 230-S	AC 198 … 264 V, 50/60 Hz	5 W	3 W	7 VA
LF 24, LF 24-S	AC 24 V, 50/60 Hz/DC 24 V	5 W	2,5 W	7 VA
NFA, NFA-S2	AC 24 ... 240 V, 50/60 Hz / DC 24 ... 125 V	6 W	2,5 W	9,5 VA
NF 24A, NF 24A-S2	AC 24 V, 50/60 Hz/DC 24 V	6 W	2,5 W	8,5 VA
SFA, SFA-S2	AC 24 ... 240 V, 50/60 Hz / DC 24 ... 125 V	7 W	3,5 W	18 VA
SF 24A, SF 24A-S2	AC 24 V, 50/60 Hz/DC 24 V	5 W	2,5 W	7,5 VA

6.3. Wiring diagram of servo actuators Belimo

Fig. 7 Wiring diagram of servo actuators Belimo LM 230A, NM 230A a SM 230A

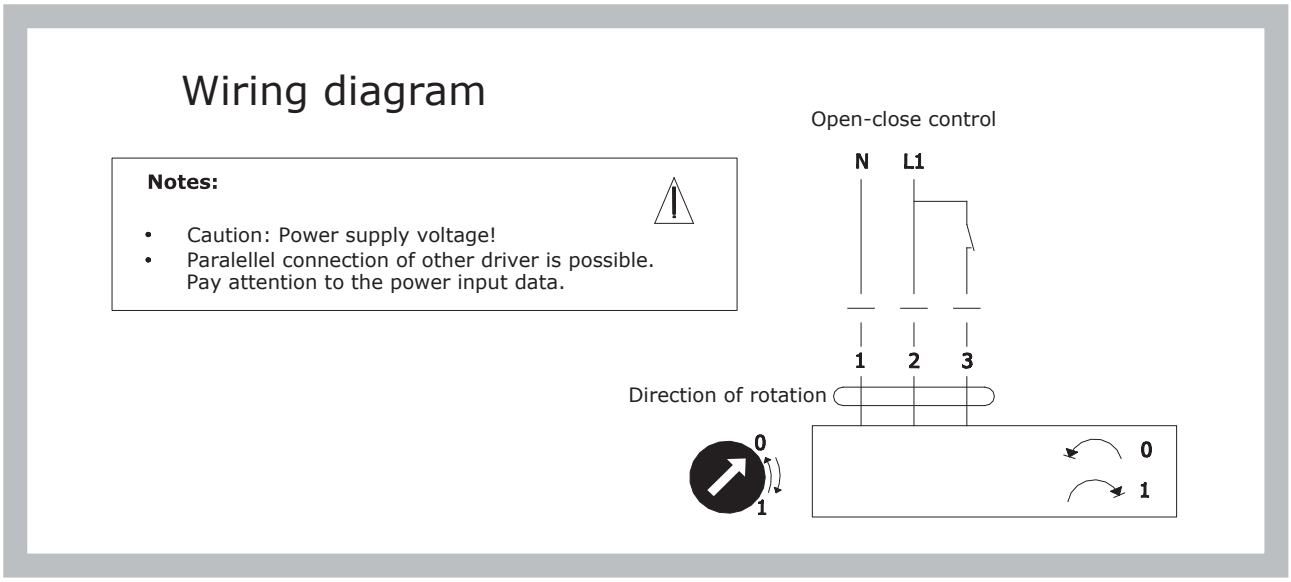

Fig. 8 Wiring diagram of servo actuators Belimo LM 230A-S, NM 230A-S a SM 230A-S

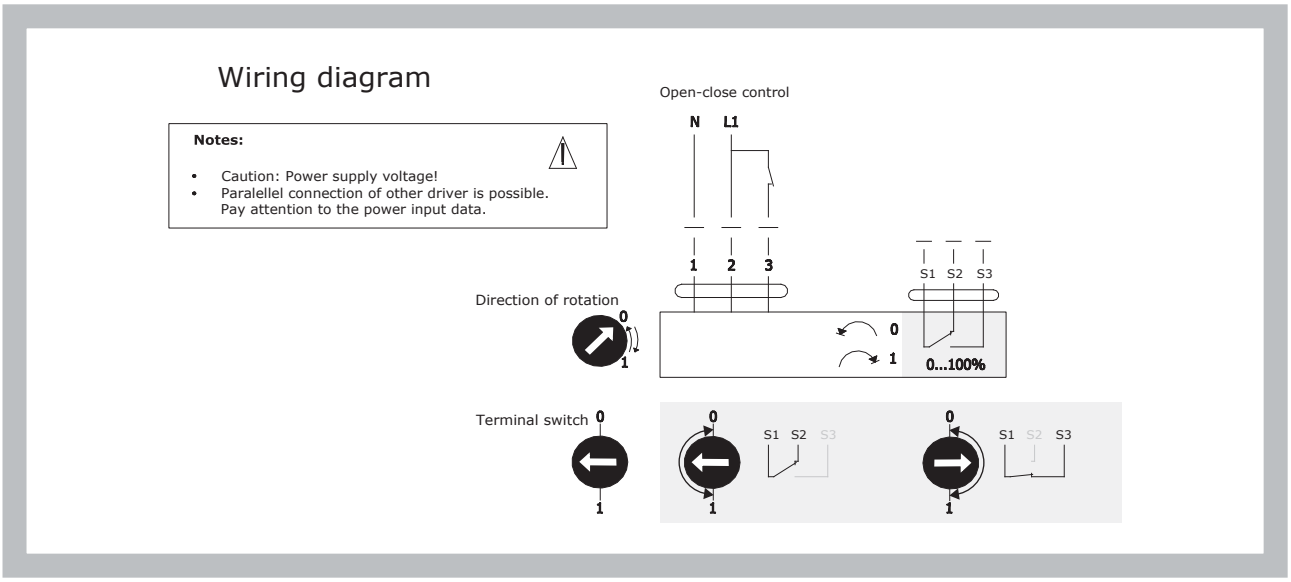

Fig. 9 Wiring diagram of servo actuators Belimo LM 24A, NM 24A a SM 24A

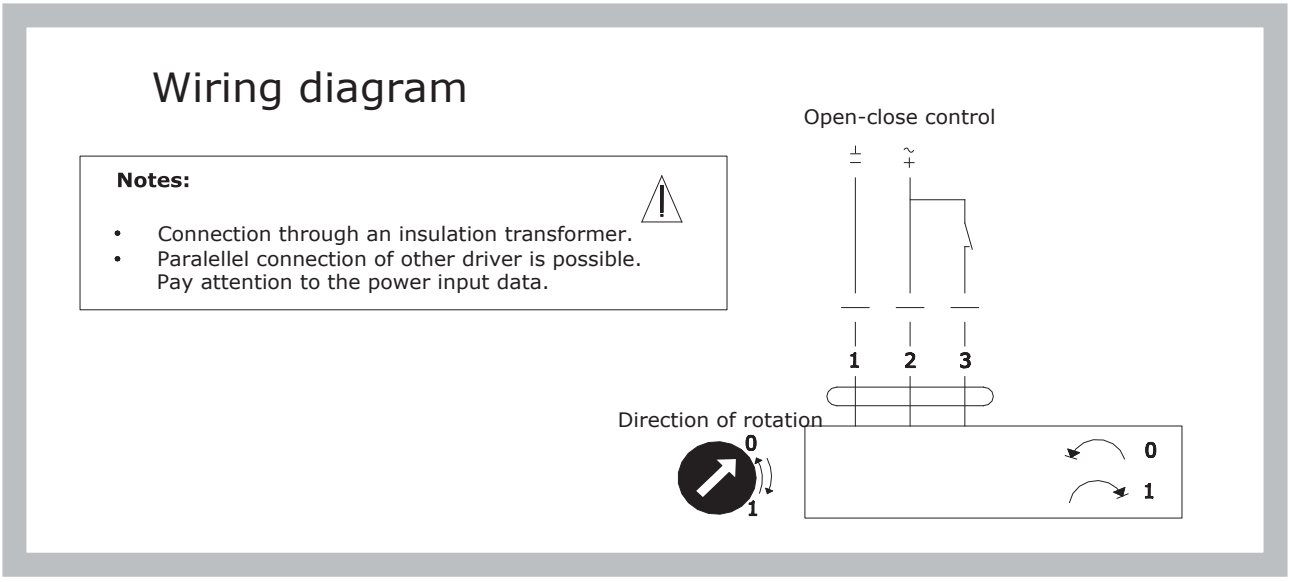

Fig. 10 Wiring diagram of servo actuators BelimoLM 24A-S, NM 24A-S a SM 24A-S

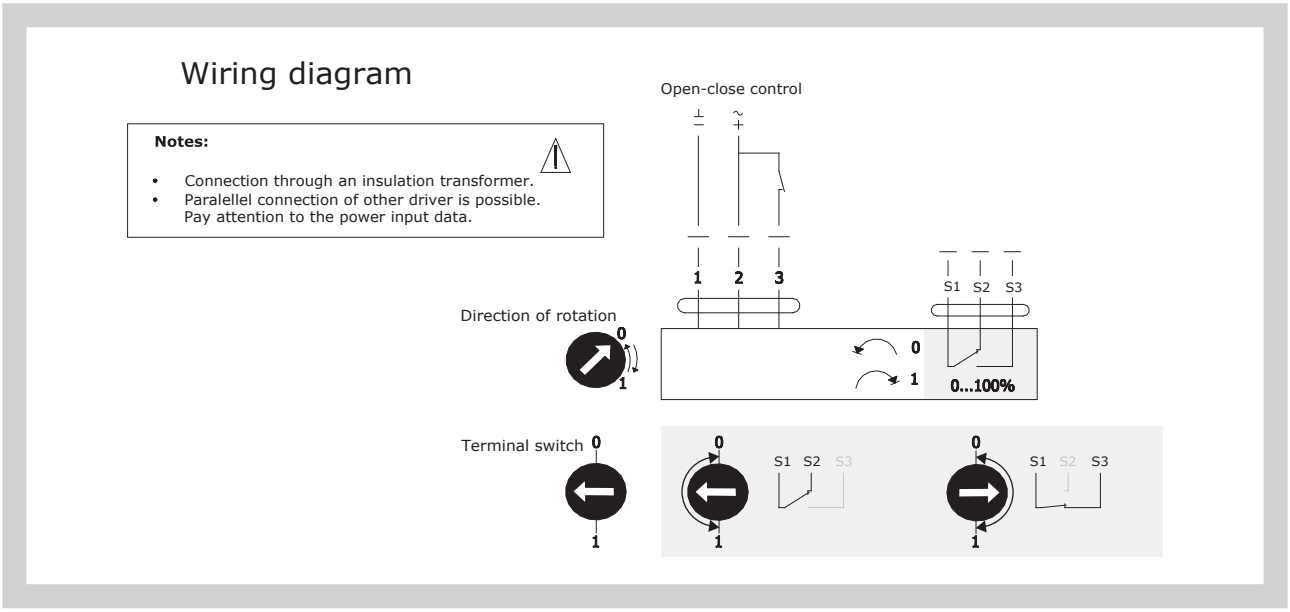

Fig. 11 Wiring diagram of servo actuators Belimo LM 24A-SR, NM 24A-SR a SM 24A-SR

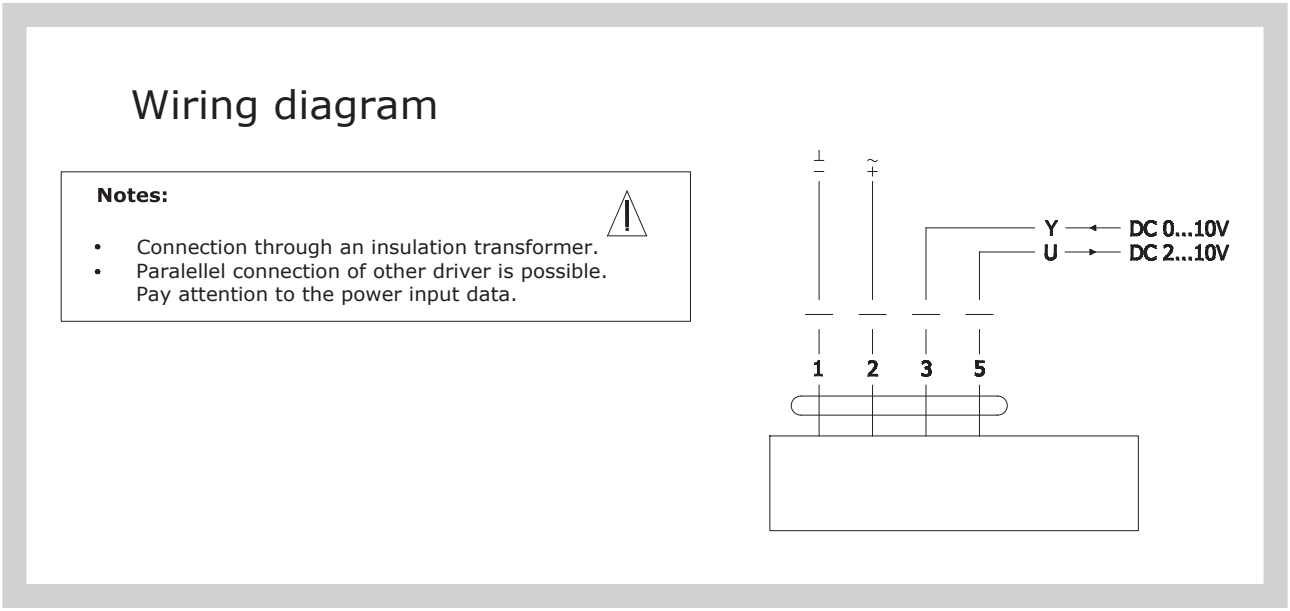

Fig. 12 Wiring diagram of servo actuators Belimo LF 24, NF 24A, SF 24A

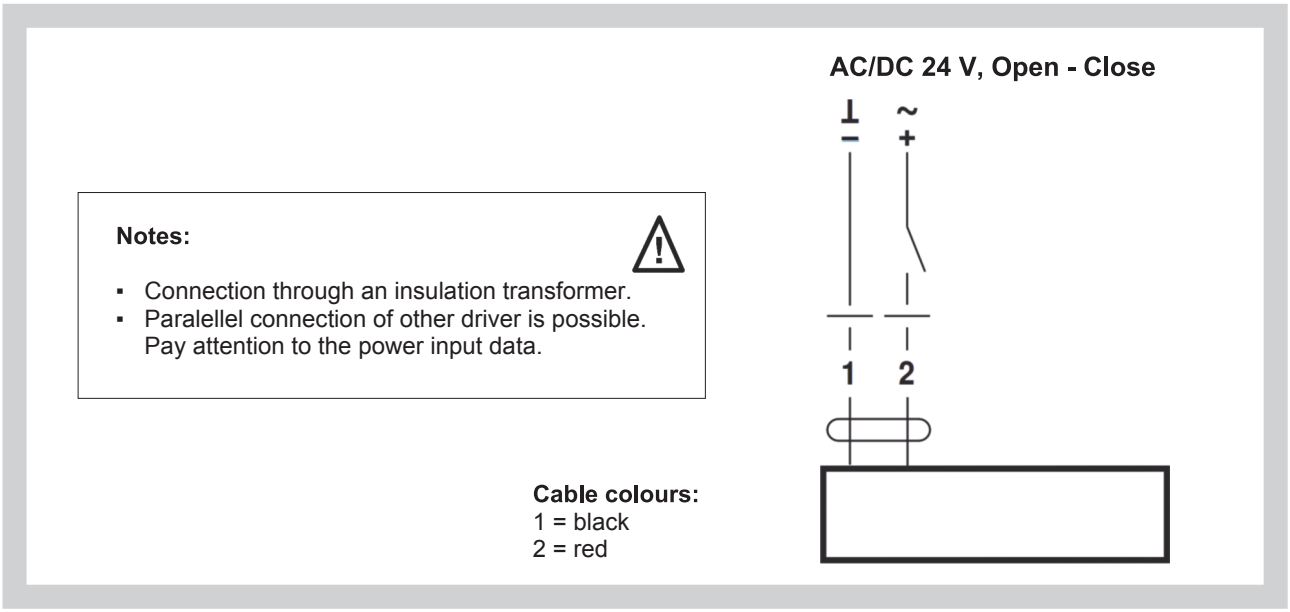

Fig. 13 Wiring diagram of servo actuators Belimo LF 230

Notes:

- Caution: Power supply voltage!
- Paralellel connection of other driver is possible. Pay attention to the power input data.

Cable colours:
1 = blue
2 = brown

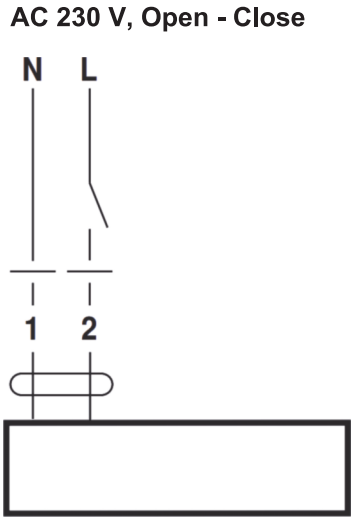

Fig. 14 Wiring diagram of servo actuators Belimo LF 24-S

Notes:

- Connection through an insulation transformer.
- Paralellel connection of other driver is possible. Pay attention to the power input data.

Cable colours:
1 = black
2 = red
S1 = white
S2 = white
S3 = white

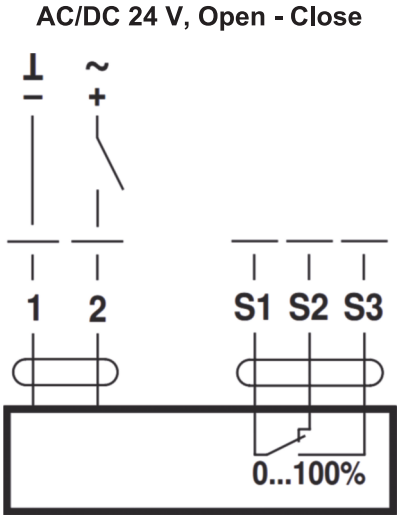

Fig. 15 Wiring diagram of servo actuators Belimo LF 230-S

Notes:

- Caution: Power supply voltage!
- Paralellel connection of other driver is possible. Pay attention to the power input data.

Cable colours:
1 = blue
2 = brown
S1 = white
S2 = white
S3 = white

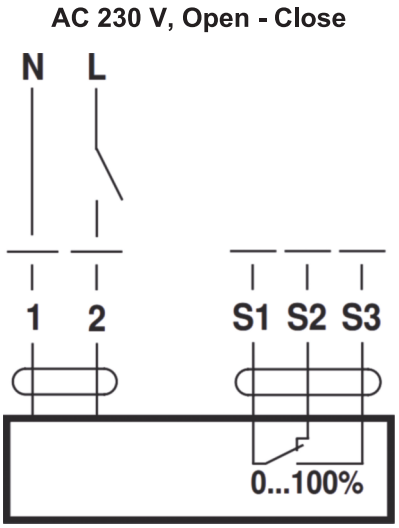

Fig. 16 Wiring diagram of servo actuators Belimo NFA, SFA

AC 24 ... 240 V / DC 24 ... 125 V, Open - Close

Notes:

- Caution: Power supply voltage!
- Paralellel connection of other driver is possible. Pay attention to the power input data.

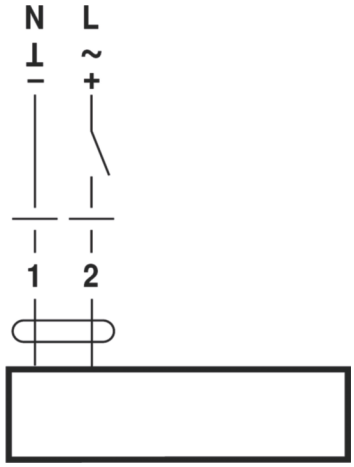

Cable colours:
1 = blue
2 = brown

Fig. 17 Wiring diagram of servo actuators Belimo NF 24A-S2, SF 24A-S2

AC/DC 24 V, Open - Close

Notes:

- Connection through an insulation transformer.
- Paralellel connection of other driver is possible. Pay attention to the power input data.

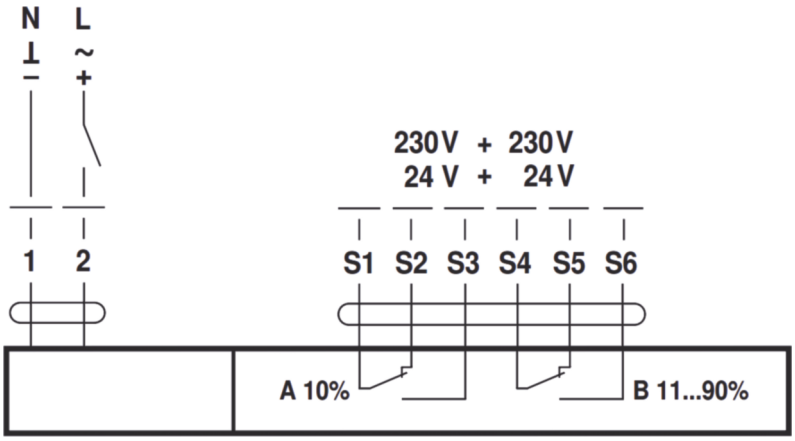

Cable colours:
1 = black
2 = red
S1 = violet
S2 = red
S3 = white
S4 = orange
S5 = pink
S6 = grey

Fig. 18 Wiring diagram of servo actuators Belimo NFA-S2, SFA-S2

AC 24 ... 240 V / DC 24 ... 125 V, Open - Close

Notes:

- Caution: Power supply voltage!
- Paralellel connection of other driver is possible. Pay attention to the power input data.

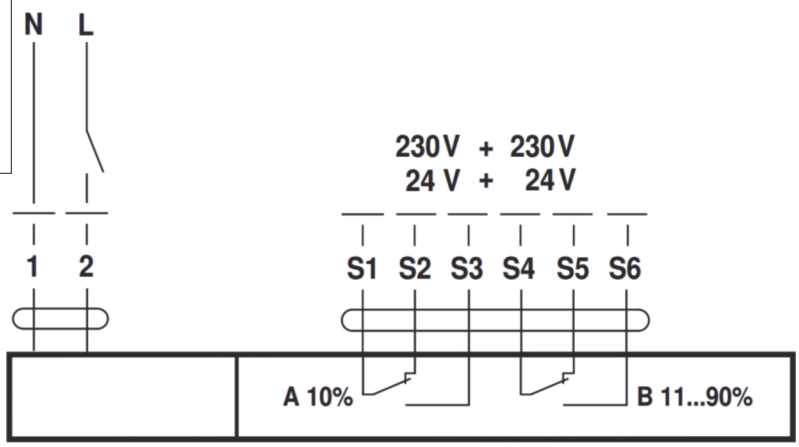

Cable colours:
1 = blue
2 = brown
S1 = violet
S2 = red
S3 = white
S4 = orange
S5 = pink
S6 = grey

7. Pressure lost, air flow characteristic

7.1. Air flow characteristic

Chart 7.1.1. Flow characteristic for constant pressure difference at the damper p = konst. = 40Pa

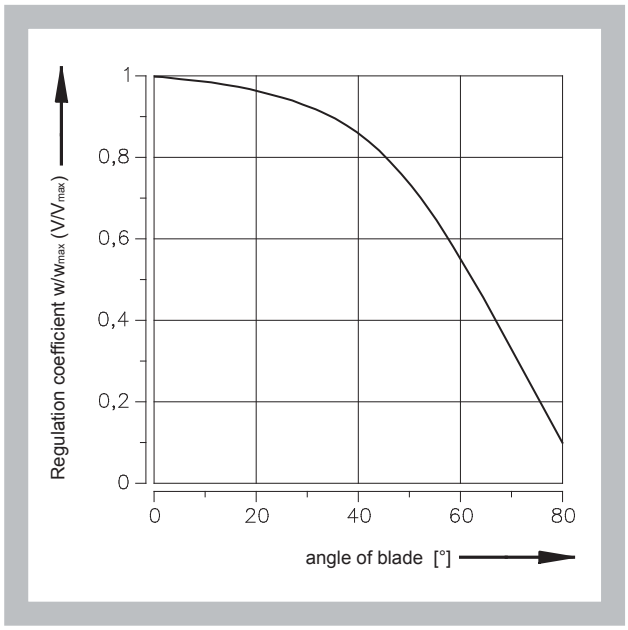

7.2. Pressure lost depending on the angle of damper blade

Chart 7.2.1. Regulation damper inserted into the duct

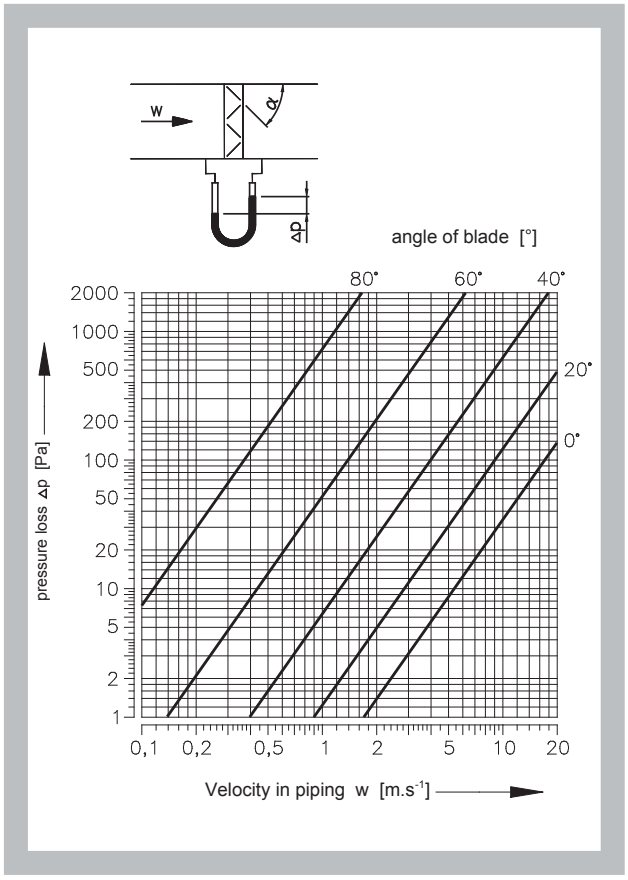

Chart 7.2.2. Regulation damper attached to the end of the duct

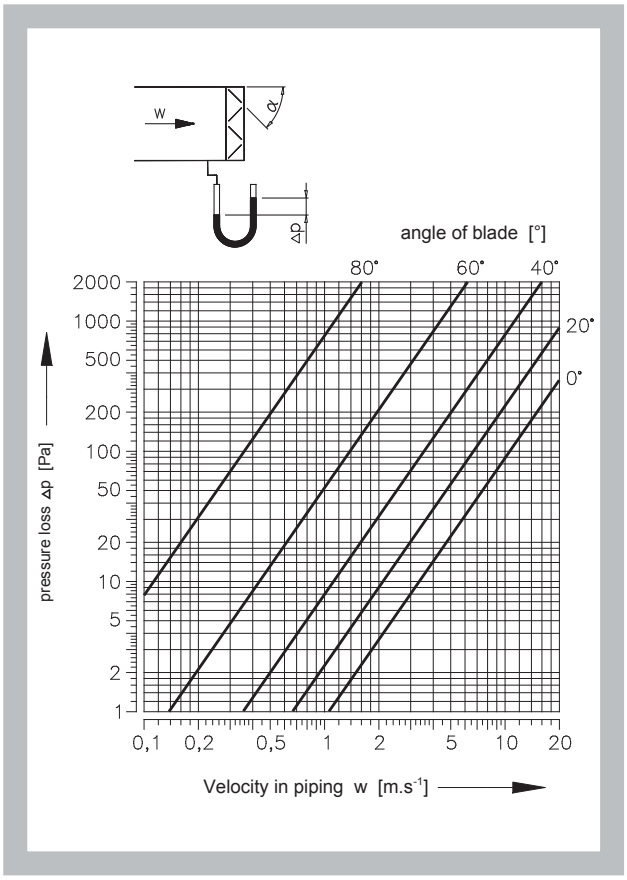

$\dot{V}$	[m .h^{-1}]	volumetric airflow	Δp	[Pa]	pressure lost at ρ= 1,2 kg.m^{-3}
w	[m.s^{-1}]	velocity of air flow	α	[°]	angle of blade

8. Noise data

8.1. Aerodynamic noise from airflow controller is mentioned in Table. 8.1.1.

$$L_{WA} = L_{WA^\circ} + K_A$$

Tab. 8.1.1. Correction

Area of damper A x B [m²]	0,04	0,06	0,1	0,2	0,4	0,6	1	2	4	8
Factor K [dB]	-13	-12	-10	-8	-4	-2	1	3	6	9

Diagram 8.1.1. Aerodynamic noise

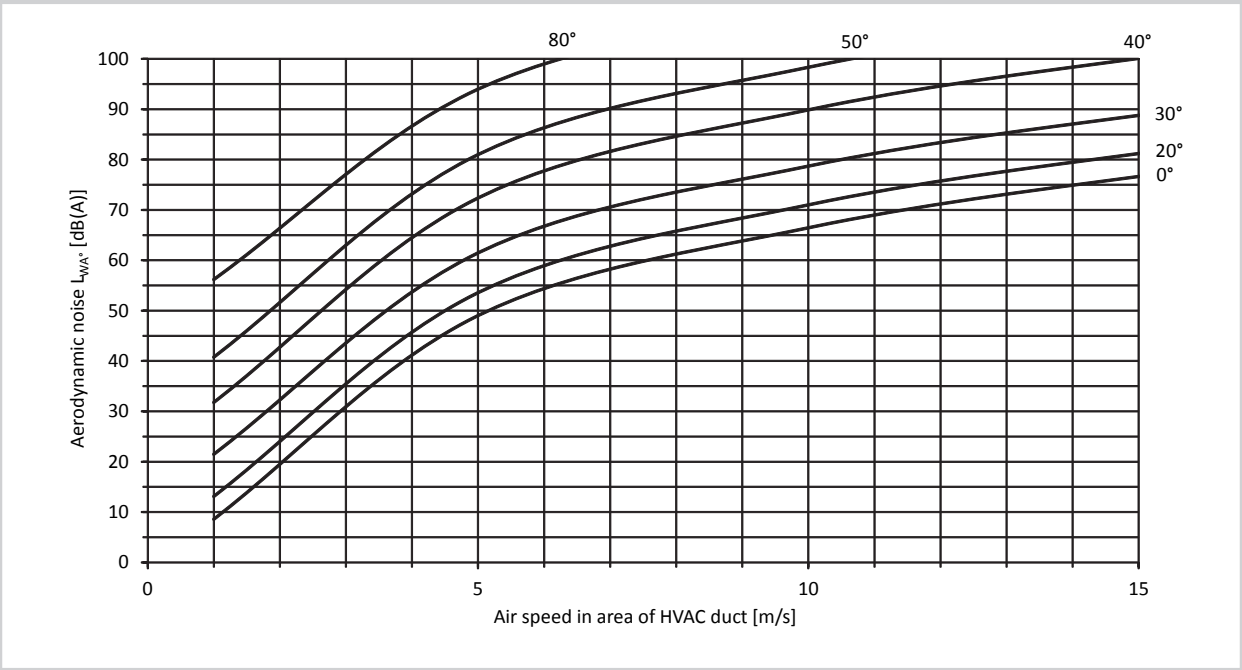

IV. ORDERING INFORMATION

9. Ordering key

RKM 500x400 - .45 TPM 009/00

- TPM 009/00 — technical specifications
- .45 — design according to Tab. 2.1.1.
- 500x400 — size
- RKM — type

V. MATERIAL, FINISHING

10. Material

10.1. The frame, blades and actuator are made of zinc−plated steel sheet, the pins of the damper are made of plastic.

10.2. The damper has no other surface treatment.

VI. INSPECTION, TESTING

11. Inspection

11.1. Dimensions are checked using regular rulers according to the standard applicable to dimensions without defined tolerances used in the air conditioning trade.

11.2. Intraoperational inspections of the parts and main dimensions according to the drawing documentation are performed.

12. Testing

12.1. After assembly, the operation of the blade and of electrical actuators is performed.

VII. PACKING, TRANSPORT, STORAGE

13. Logistical data

13.1. The delivery includes a complete damper including the control mechanism.

13.2. The damper are transported as bulk cargo, using suitable covered means of transport. When agreed upon with the manufacturer, the dampers can be loaded onto palettes or wooden crates. Dampers must be protected from mechanical damage during transport and storage.
If packing is used, it is non−returnable and its price is not included in the price of the damper.

13.3. If not otherwise agreed, the handover is considered when the goods is forwarded to the carrier.

13.4. The dampers must be stored in the indoor environment without any aggressive vapours, gases or dust. Indoor temperature must be in the range from -5 °C to +40 °C and maximum relative humidity 80%. Dampers must be protected against mechanic damages when transported and manipulated.

VIII. ASSEMBLY

14. Assembly

14.1. The assembly consists of installation of the damper into the air duct, with connection of optional servo actuator to the mains.

MANDÍK®

WHIRLING AIR OUTFLOW OUTLET WITH FIXED BLADES

VVPM

These technical specifications state a row of manufactured sizes and versions of whirling air outflow outlet with fixed blades VVPM 300, 400, 500, 600 and 625 (further only outlets). It is valid for production, designing, ordering, delivery, assembly and operation.

I. CONTENT

II. GENERAL **2**

1. Description..... 2
2. Design..... 2
3. Dimensions and weights..... 3
4. Installation..... 4

III. TECHNICAL DATA **4**

5. Basic parameters..... 4
6. Air flow parameters..... 5
7. Aerodynamic data..... 6

IV. MATERIAL, FINISHING **9**

8. Material..... 9

V. TRANSPORTATION AND STORAGE **9**

9. Logistics terms..... 9

VI. ORDERING INFORMATION **10**

10. Ordering key..... 10

II. GENERAL

1. Description

1.1. Whirling air outflow outlet with fixed blades are end HVAC elements of air handling or air conditioning systems.

The whirling air outflow ensures intensive mixing with the internal air to decrease the velocity and temperature.

The outlets are suitable for the room height of approximately 2.6 to 4.0 m, with the air exchanges up to 30 times per hour.

1.2. Outlets are designed for macroclimatic areas with mild climate according to EN 60 721-3-3.

1.3. Temperature in the place of installation is permitted to range from - 20°C to + 70°C.

1.4. Outlets are suitable for systems without abrasive, chemical and adhesive particles.

1.5. If is not noticed other way, all dimensions and weight are in millimeters and kilograms.

2. Design

2.1. The outlets are delivered with square or round front panels. Front panels are equipped by fixed blades arranged in a circle.

For air inlet is plenum box equipped by air disperse element. For air outlet it is not necessary.

Front panels are installed in plenum boxes by using of central screw.

2.2. Connection to duct:

- horizontal connection (by round connecting branches via the plenum box from side as required with or without the regulating flap)
- vertical connection (by round connecting branches via the plenum box from the top as required with or without the regulating flap)

Fig. 1 Design VVPM/C - square front panel

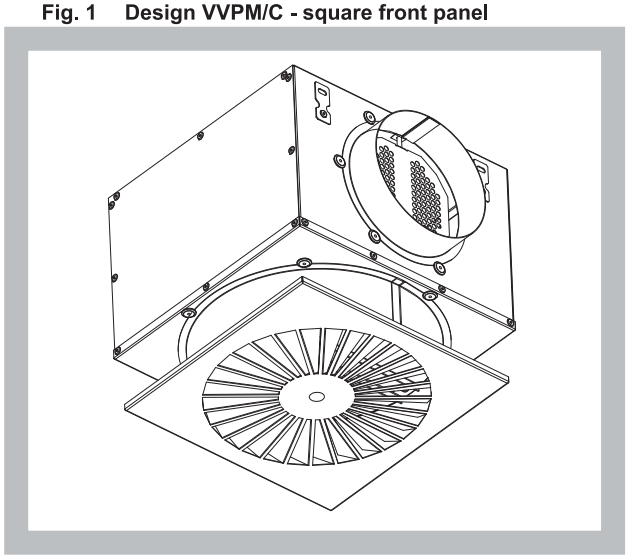

Fig. 2 Design VVPM/K - round front panel

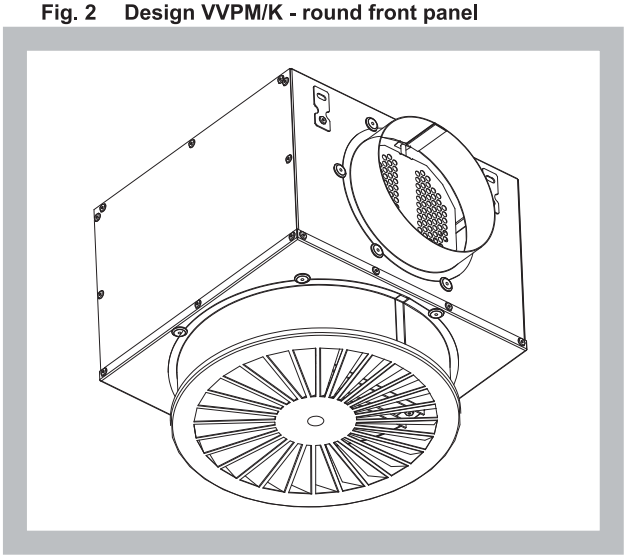

3. Dimensions and weights

3.1. Outlets dimensions

Tab. 3.1.1. Dimensions

Size	C	ØK	ØD	Ø B	A	H_1	H_2
300	298	298	158	260	310	290	180
400	398	398	198	365	400	300	180
500	498	498	198	460	500	300	200
600	598	598	248	560	600	350	200
625	623	623	248	560	600	350	200

Fig. 3 Front panels

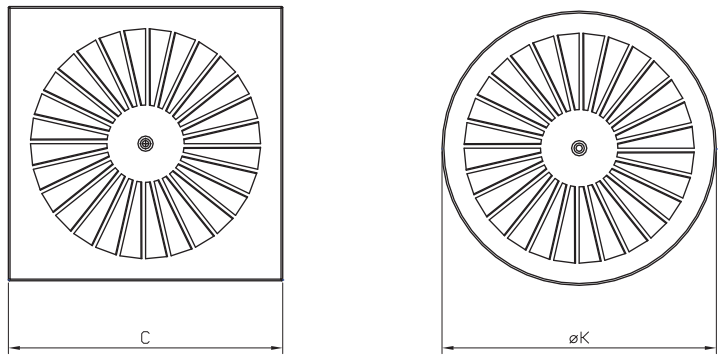

Fig. 4 Plenum boxes

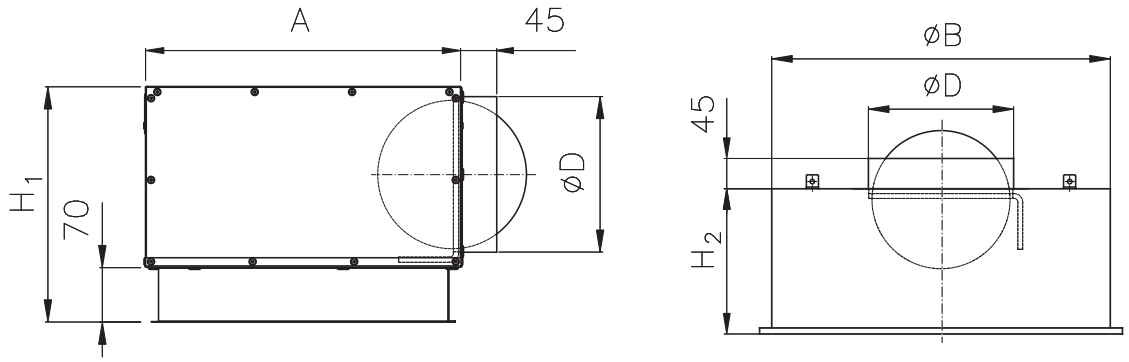

3.2. Weights

Tab. 3.2.1. Weights

Size	Connection		Front panel without plenum box [kg]
	horizontal [kg]	vertical [kg]	
300	4,0	2,9	0,8
400	5,7	4,2	1,4
500	7,9	6,1	2,1
600	11,0	8,1	3,0
625	11,2	8,4	3,3

4. Installation

4.1. All sizes are suitable for installation in the ceiling or for installation outside closed ceilings. The connecting boxes are fitted with suspension devices. Several examples of possible suspension follow.

Fig. 5 Installation

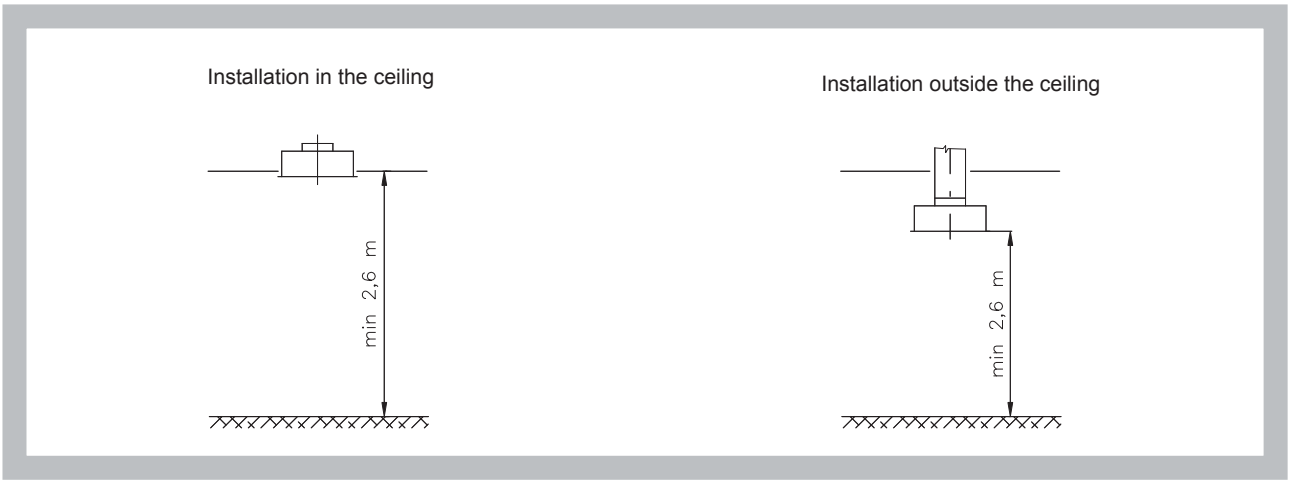

Fig. 6 Suspension methods

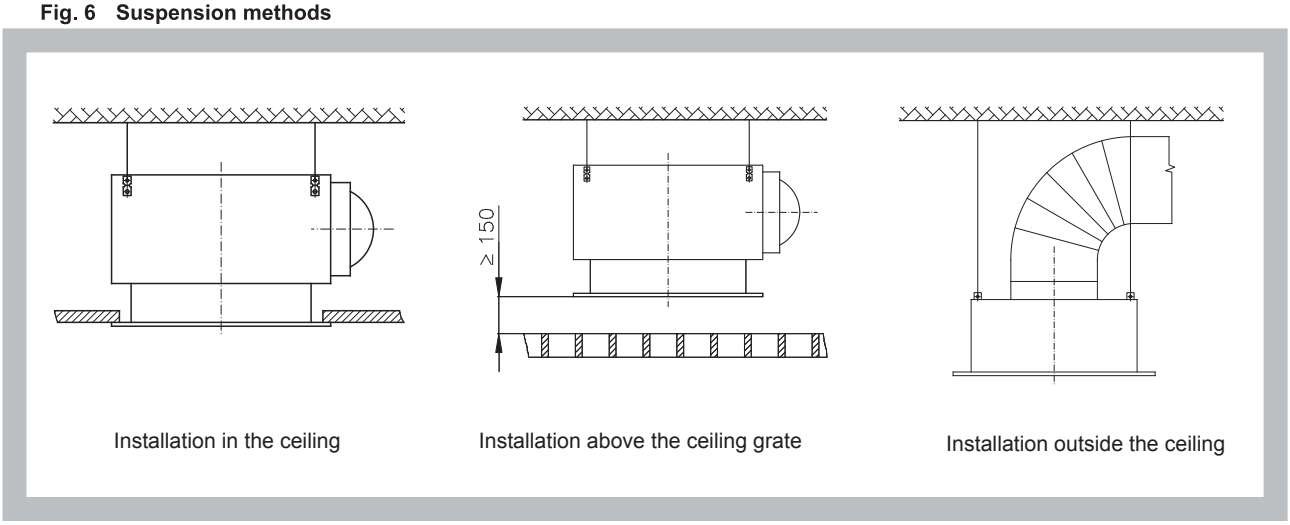

III. TECHNICAL DATA

5. Basic parameters

5.1. Basic parameters

Tab. 5.1.1. Basic parameters

Size	300		400		500		600, 625	
Connection	horizontal	vertical	horizontal	vertical	horizontal	vertical	horizontal	vertical
$\mathring{V}_{max}$ [m³.h⁻¹]	200		350		480		600	
$\mathring{V}_{min}$ [m³.h⁻¹]	120		180		280		330	
L_{WAmax} [dB(A)]	40	39	38	42	40	43	41	41
L_{WAmin} [dB(A)]	24	25	18	24	25	28	24	24
S_{ef} [m²]	0,0128		0,0245		0,0374		0,0450	

6. Air flow parameters

Fig. 7

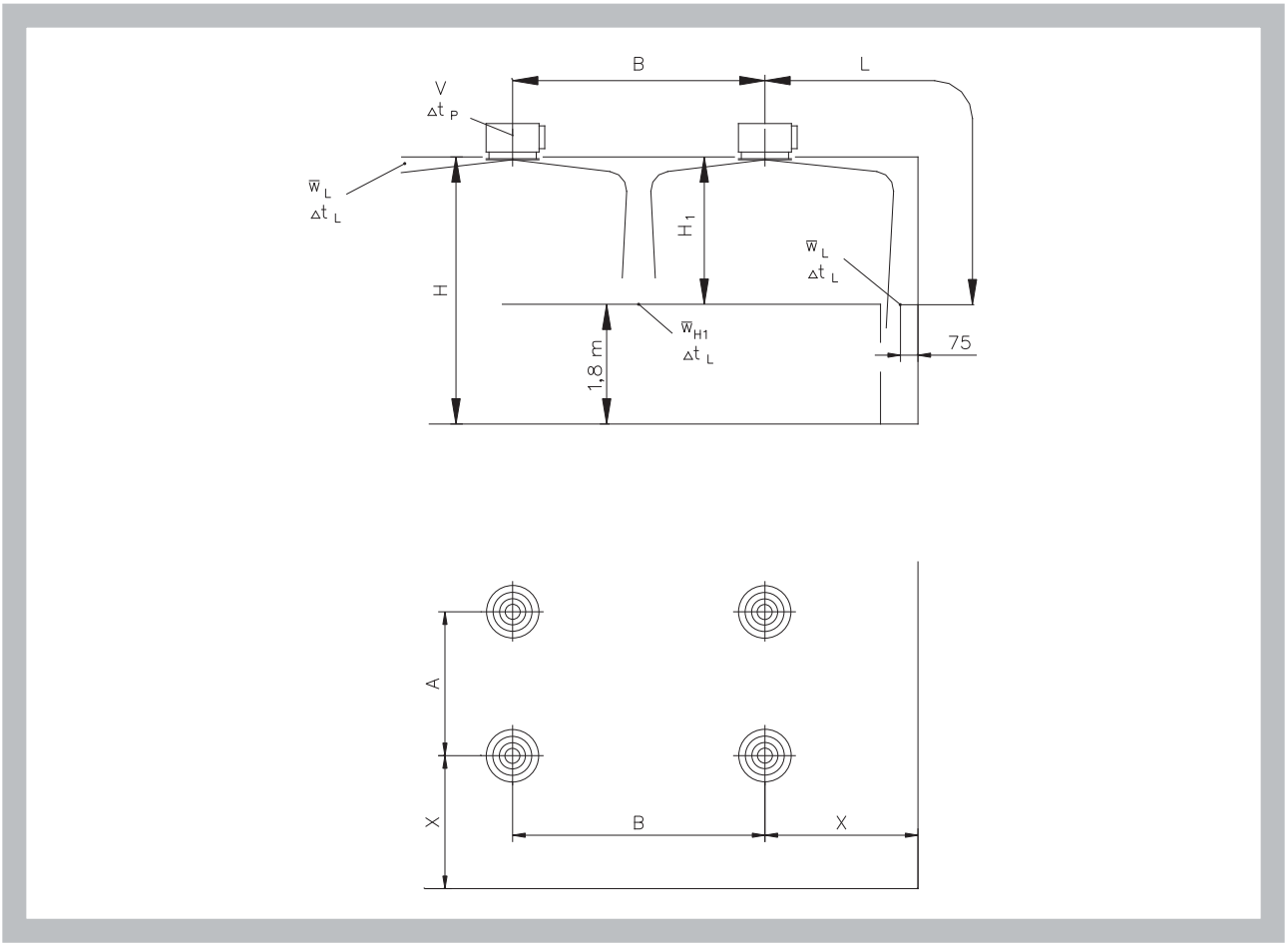

$\dot{V}$	[m³/h]	air volume flow rate for one outlet
A, B	[m]	distance between two outlets
L	[m]	horizontal + vertical distance ($X + H_1$)
X	[m]	distance from the outlet centre to the wall
H	[m]	ceiling height - from 2.6 to 4.0 m
H_1	[m]	distance between the ceiling and the occupied zone
w_L	[m.s^{-1}]	medium velocity of air stream on the wall
w_{H1}	[m.s^{-1}]	medium velocity of air stream between two outlets at distance H_1
w_{ef}	[m.s^{-1}]	effective velocity
Δt_p	[K]	difference between the supplied air temperature and room air temperature
Δt_L	[K]	difference between the air temperature in the stream axis in length L and the room air temperature in length $L = A/2 + H_1$ or $L = B/2 + H_1$ or $L = X + H_1$
Δp_c	[Pa]	total pressure loss at $\rho = 1{,}2$ kg/m³
L_{WA}	[dB(A)]	level of acoustic output
S_{ef}	[m²]	effective area

7. Aerodynamic data

7.1. Pressure losses and sound power

Diagram 7.1.1. VVPM - horizontal connection - INLET

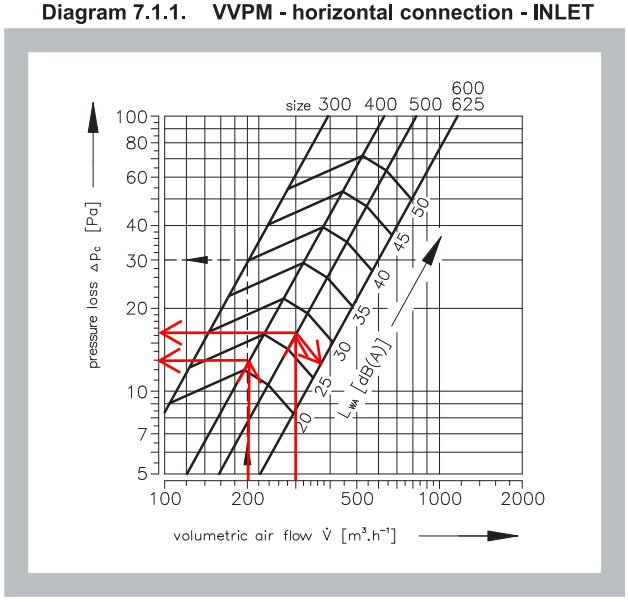

Diagram 7.1.2. VVPM - horizontal connection - OUTLET

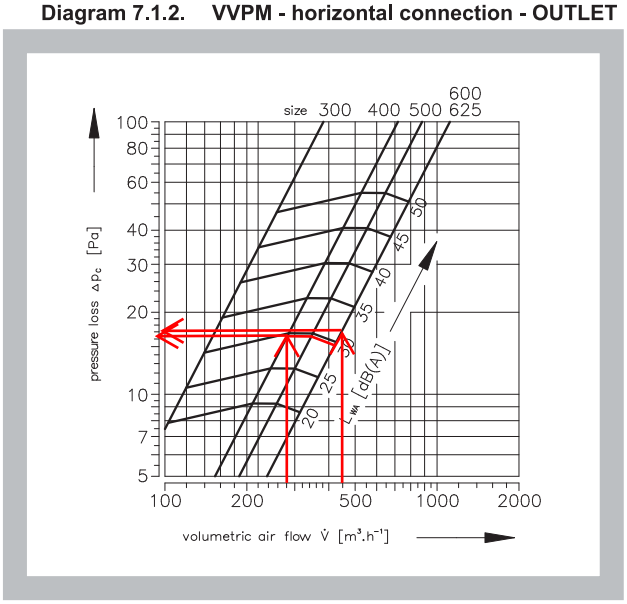

Diagram 7.1.3. VVVPM - vertical connection - INLET

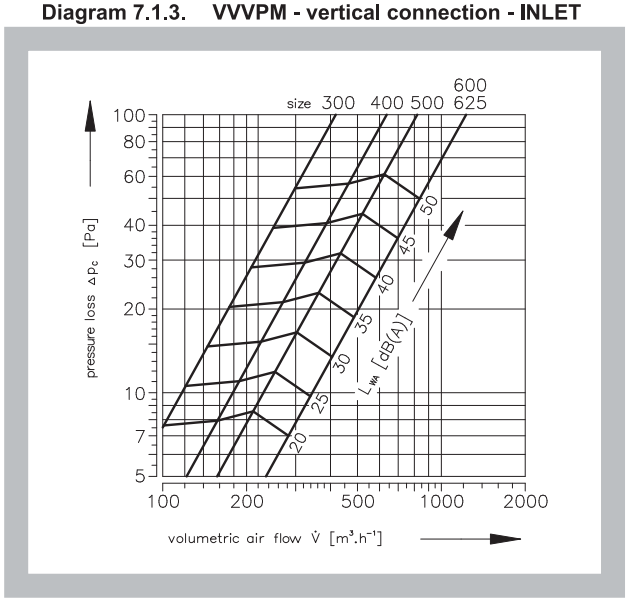

Diagram 7.1.4. VVPM - vertical connection - OUTLET

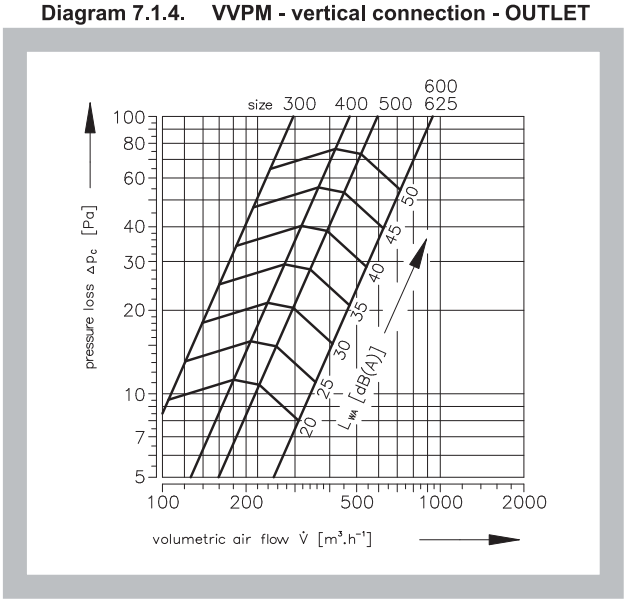

7.2. Correction coefficients of pressure losses and sound power according to the flap setting angle.

Tab. 7.2.1. Correction coefficients related to diagram 7.1.1.

Size		Flap setting angle		
		0°	45°	90°
300	Δp_c	x1,0	x1,3	x2,7
	L_{WA}	-	+0	+2
400	Δp_c	x1,0	x1,5	x2,2
	L_{WA}	-	+1	+3
500	Δp_c	x1,0	x1,6	x3,1
	L_{WA}	-	+1	+8
600 625	Δp_c	x1,0	x1,5	x2,9
	L_{WA}	-	+1	+4

Tab. 7.2.1. Correction coefficients related to diagram 7.1.3.

Size		Flap setting angle		
		0°	45°	90°
300	Δp_c	x1,0	x1,3	x2,7
	L_{WA}	-	+0	+2
400	Δp_c	x1,0	x1,5	x2,2
	L_{WA}	-	+1	+3
500	Δp_c	x1,0	x1,6	x3,1
	L_{WA}	-	+1	+8
600 625	Δp_c	x1,0	x1,5	x2,9
	L_{WA}	-	+1	+4

7.3. Effective velocity and temperature coefficient

Diagram 7.3.1. Effective velocity

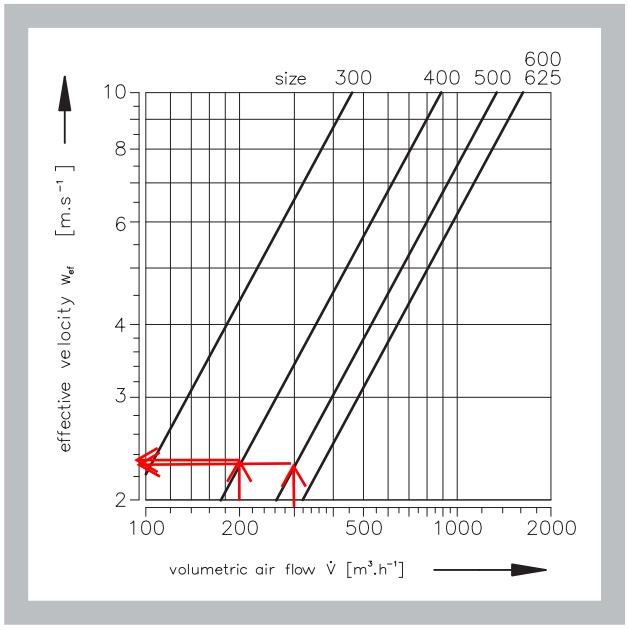

Diagram 7.3.2. Temperature coefficient

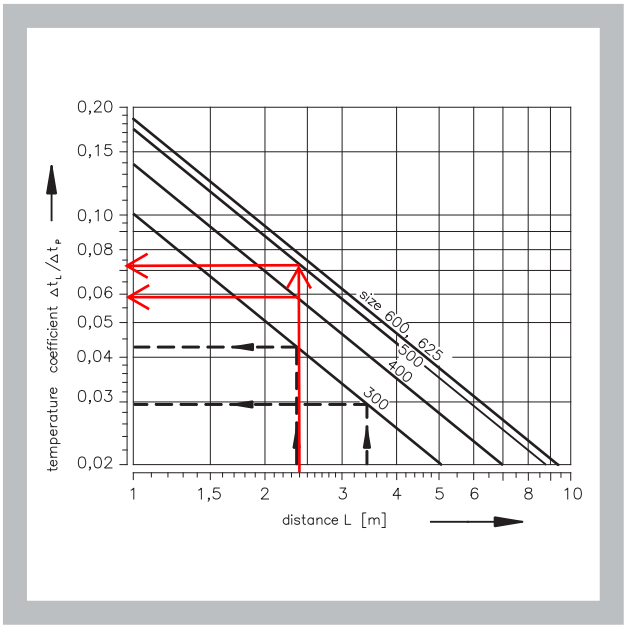

Fig. 8

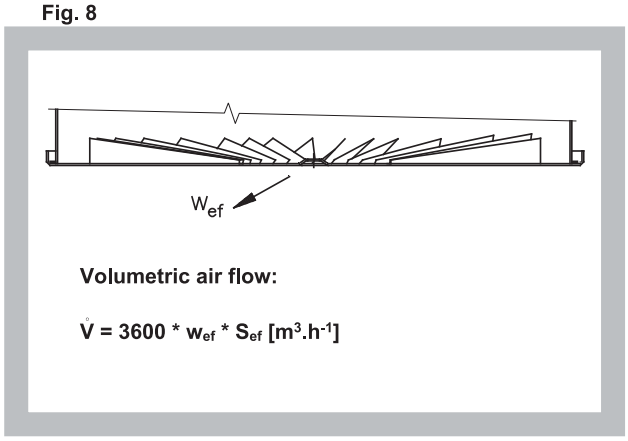

7.4. Air velocity

Diagram 7.4.1. Air velocity - size 300

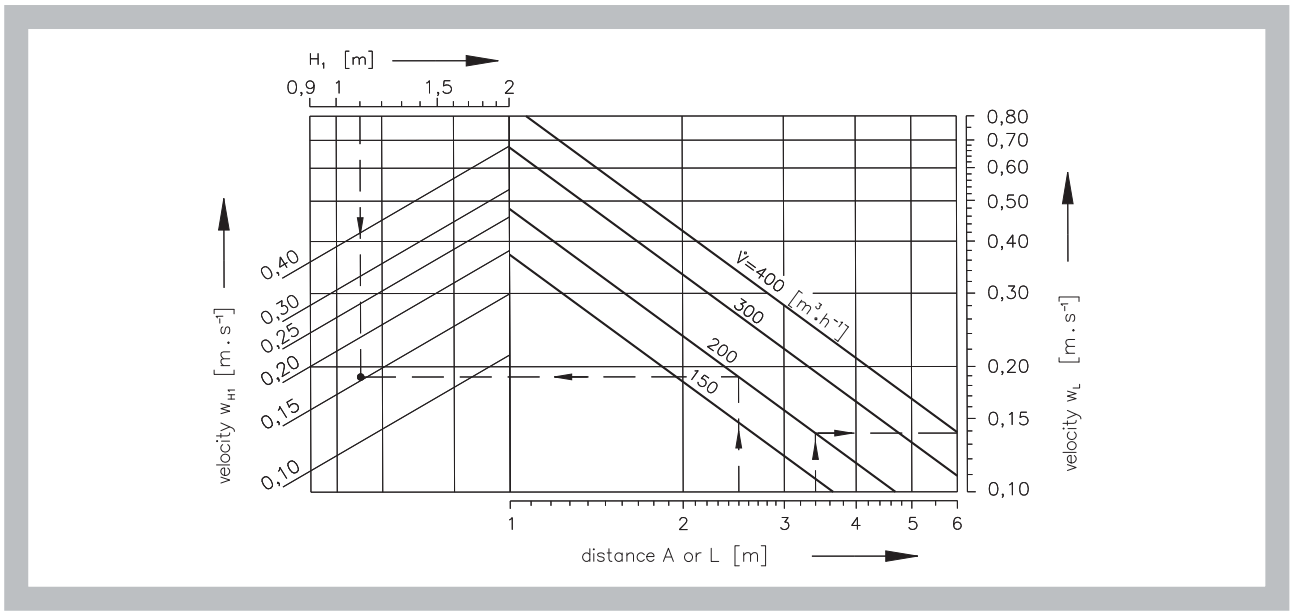

Diagram 7.4.2. Air velocity - size 400

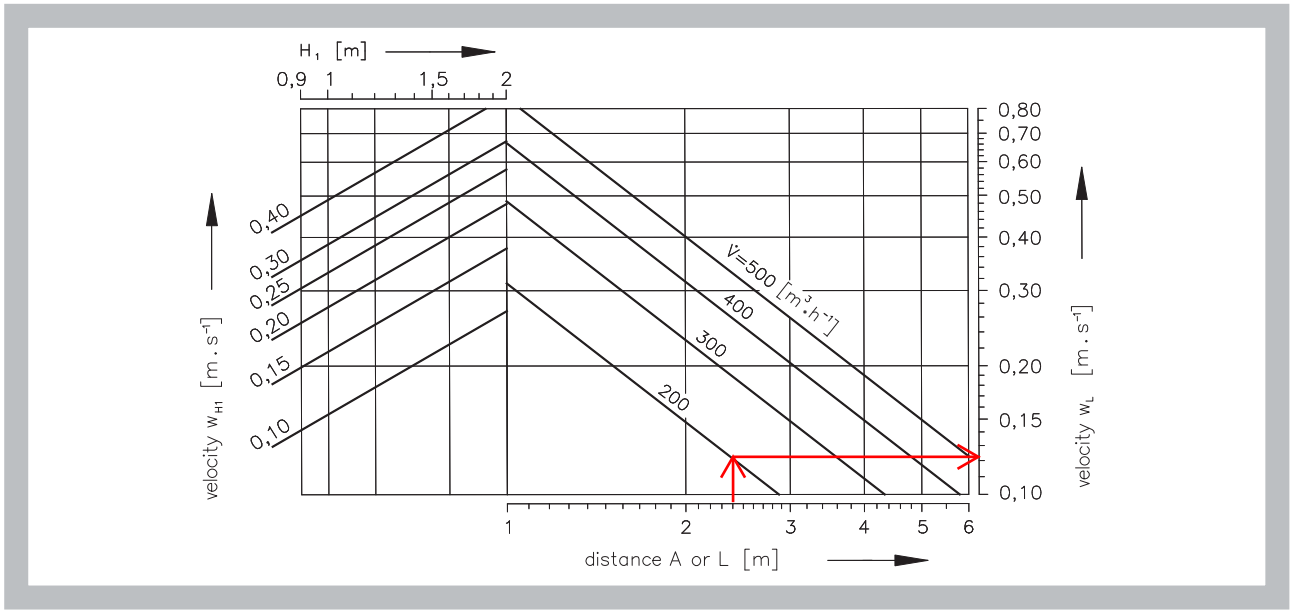

Diagram 7.4.3. Air velocity - size 500

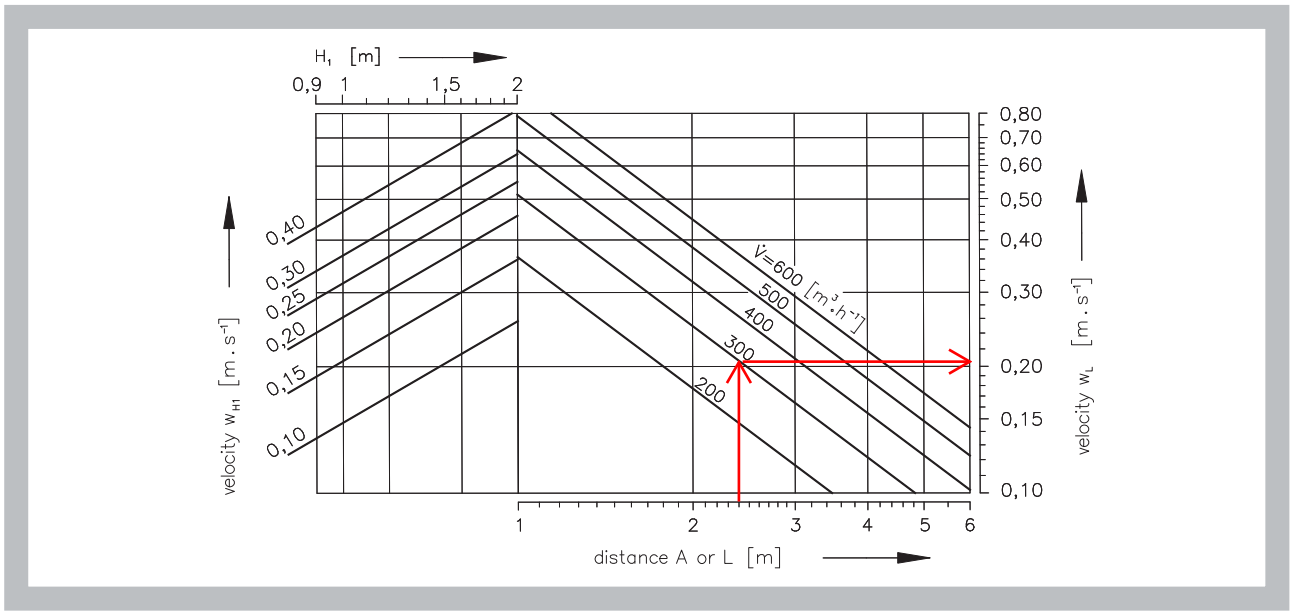

Diagram 7.4.4. Air velocity - size 600, 625

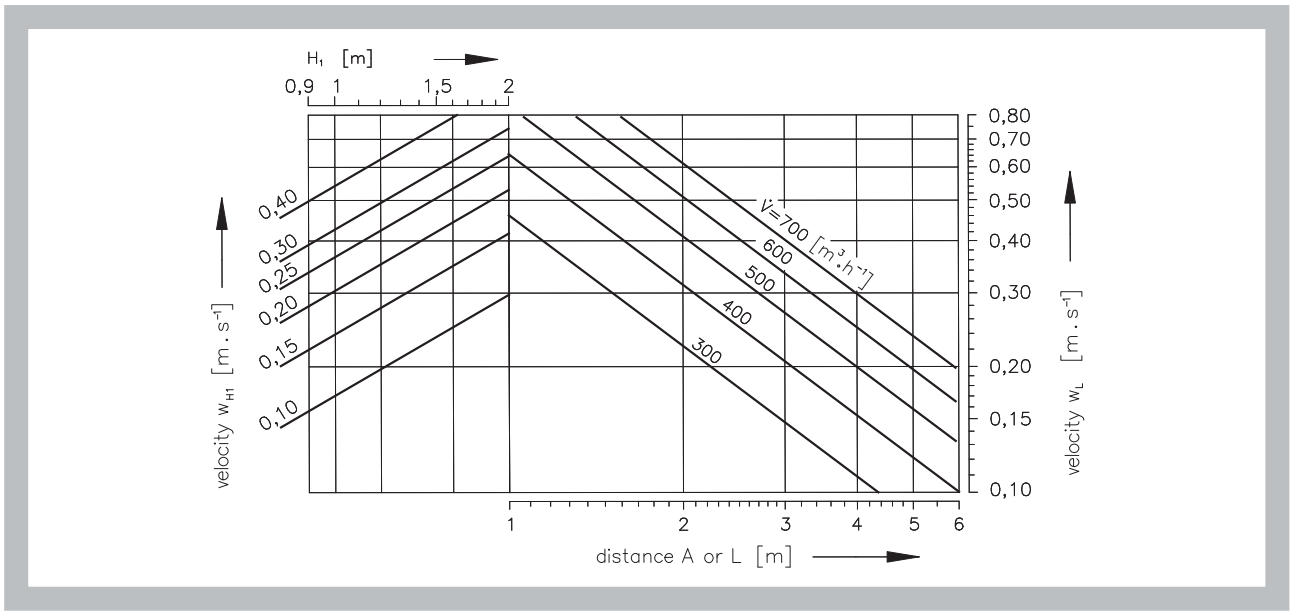

Fig. 9 Example

Given data:	Outlet VVPM 300 C/V/P/R	
	$\dot{V}$ = 200 $m^3.h^{-1}$	
	Δt_p = - 8 K	
	H_1 = 1,1 m	
	A = 2,5 m	
	X = 2,3 m	
Diagram 7.1.1. :	L_{WA} = 40 dB(A)	
	Δp_c = 30 Pa	
Diagram 7.3.2. :	L = A/2 + H_1 = 2,35 m	between outlets
	Δt_L / Δt_p = 0,042	
	Δt_L = - 8 * 0,042 = - 0,34 K	
	L = X + H_1 = 3,4 m	on the wall
	Δt_L / Δt_p = 0,029	
	Δt_L = - 8 * 0,029 = - 0,23 K	
Diagram 7.4.1. :	$\overline{w}_{H1}$ = 0,15 $m.s^{-1}$	between outlets
	$\overline{w}_L$ = 0,14 $m.s^{-1}$	on the wall

IV. MATERIAL, FINISHING

8. Material

8.1. Front panels are made of steel sheet. The surface is coated with white baking varnish, shade RAL 9010. The plenum boxes are made of galvanized steel sheet.

8.2. Requirements for other shades of the front panels shall be agreed in advance.

V. TRANSPORTATION AND STORAGE

9. Logistic terms

9.1. The outlets are delivered in cardboard packaging. They are transported in bulk by common means of transport. If agreed with the customer, the outlets can be delivered on pallets. When handling during transport or storage, the outlets must be protected against mechanical damage and weather effects.

9.2. The outlets must be stored in closed rooms, in environment without aggressive vapours, gases and dust. The temperature in the rooms must be maintained from -5 to +40°C and relative humidity max. 80%.

VI. ORDERING INFORMATION

10. Ordering key

Outlet **VVPM** **600** **C/V/P/R** **TPM 007/99**

- Technical conditions
- R – with regulating flap
  - without regulating flap
- P – air supply
- O – air exhaust
- V – horizontal connection
- S – vertical connection
- C – square front panel
- K – round front panel
- Size
- Type

FINESSE / VCF-EC

CHARAKTERISTIKA

- **Délka: 1; 1,5; 2 a 2,5 m**
- Vzduchový výkon **až 4 610 m³/h** (ISO 27 327-1)
- Regulace AirGENIO Superior, dotykový ovládací panel
- FACE 2 in 1 – sací mřížka a filtr v jednom
- Energeticky úsporné EC motory
- Nízká hladina akustického výkonu
- Jednoduchá instalace a obsluha
- Standardní odstín RAL 9010 (další odstíny ze vzorníku RAL na poptání)
- Clona FINESSE je určena pro instalaci do podhledu

DOPLŇUJÍCÍ INFORMACE

- Clona je dodávána s integrovanou regulací typ Superior

FINESSE

Diskrétní a vysoce výkonná clona pro instalaci do podhledu. Vhodná pro použití ve vstupních prostorách bank, administrativních centrech, luxusních buticích, obchodních centrech a letištních halách. Doporučená maximální instalační výška 4 m*.

* Maximální doporučená výška instalace pro většinu aplikací (může se lišit v závislosti na konkrétních podmínkách v místě instalace), platí pro nejvyšší výkon, když rychlost vzduchu dosáhne 3 m/s.

Vzduchová clona by měla být instalována v suchém prostředí s okolní teplotou v rozmezí od +5 °C do +40 °C a relativní vlhkostí do 80 %. Clona je navržena pro dopravu vzduchu bez hrubého prachu, mastnot, chemických výparů a dalších znečištění. Elektrické krytí clony jako celku je IP20.

Návrh vzduchové clony by měl vždy řešit projektant vzduchotechniky.

HLAVNÍ PARAMETRY

Vzduchové clony s elektrickým ohřívačem jsou osazeny automatickým a havarijním termostatem s ručním resetem. Teplovodní výměníky jsou navrženy pro maximální provozní teplotu +100 °C a tlak 1,6 MPa.

Bez ohřevu

Vodní výměník

Elektrický drátkový ohřívač

VCF-B

Typ clony	Doporučená instalační výška [m]	Vzduchový výkon [m³/h] *1					Akustický tlak ve 3 m [dB(A)] *2	Akustický výkon [dB(A)] *3	Výkon ohřívače [kW]	Napětí/ proud ohřívače [V/A]	Napětí/ proud ventilátoru [V/A]	Zvýšení teploty Δt [°C] 4*	Frekvence [Hz]	Hmotnost [kg] 5*
		100%	80%	60%	40%	20%								
VCF-B-100-E-...EC	4,0	1810	1760	1480	1100	620	58,8	76,3	9,4	400/15,8	230/2,2	15,6	50	35,5
VCF-B-150-E-...EC		2710	2650	2210	1660	930	60,8	78,3	15	400/24,9	230/3,2	16,6	50	48,5
VCF-B-200-E-...EC		3620	3530	2950	2210	1240	62,2	79,7	19	400/31,7	230/4,3	15,7	50	63
VCF-B-250-E-...EC		4520	4410	3690	2760	1550	63,4	80,9	24,5	400/40,7	230/5,3	16,3	50	75
VCF-B-100-V-...EC		1700	1650	1410	1020	550	57,5	75	19,1***	230/2,3	230/2,2	37,5	50	37
VCF-B-150-V-...EC		2550	2480	2110	1540	820	59,3	76,8	29,7***	230/3,3	230/3,2	39,1	50	50
VCF-B-200-V-...EC		3400	3300	2820	2050	1100	60,5	78	39,5***	230/4,4	230/4,3	39	50	65
VCF-B-250-V-...EC		4250	4130	3520	2560	1370	61,8	79,3	48,4***	230/5,4	230/5,3	38,2	50	77
VCF-B-100-S-...EC		1850	1800	1510	1120	630	58,8	76,3	-	230/2,3	230/2,2	-	50	33,5
VCF-B-150-S-...EC		2760	2700	2250	1690	950	60,8	78,3	-	230/3,3	230/3,2	-	50	45
VCF-B-200-S-...EC		3690	3600	3010	2250	1260	62,2	79,7	-	230/4,4	230/4,3	-	50	58
VCF-B-250-S-...EC		4610	4500	3760	2820	1580	63,4	80,9	-	230/5,4	230/5,3	-	50	70

*1 Vzduchový výkon dle ISO27327-1
*2 Hodnoty akustického tlaku ve vzdálenosti 3m pro maximální rychlost. Směrový faktor: Q = 2
*3 Měření akustického výkonu (Lwa) dle ISO 27327-2
*4 Teplota nasávaného vzduchu +18 °C při maximálním výkonu ohřevu a nejvyšší rychlosti ventilátoru
*5 Hmotnost bez regulace

Práva na změny vyhrazena.

1

Parametry vodního výměníku při spádu média 90/70 °C

Typ	Vzduchový výkon [m³/h]	Výkon ohřívače [kW]*	Teplota na výfuku ze clony [°C]	Průtok média [m³/h]	Tlaková ztráta vody [kPa]
VCF-B-100-V-...	1700	19,14	55,5	0,84	7,75
VCF-B-150-V-...	2550	29,7	57,1	1,31	21,39
VCF-B-200-V-...	3400	39,49	57	1,74	18,93
VCF-B-250-V-...	4250	48,4	56,2	2,13	20,01

* Při teplotě nasávaného vzduchu +18 °C

Parametry vodního výměníku při spádu média 80/60 °C

Typ	Vzduchový výkon [m³/h]	Výkon ohřívače [kW]*	Teplota na výfuku ze clony [°C]	Průtok média [m³/h]	Tlaková ztráta vody [kPa]
VCF-B-100-V-...	1700	15,92	48,5	0,7	5,59
VCF-B-150-V-...	2550	24,92	50,1	1,09	15,89
VCF-B-200-V-...	3400	33,08	49,9	1,45	13,93
VCF-B-250-V-...	4250	40,53	49,2	1,78	14,52

* Při teplotě nasávaného vzduchu +18 °C

Parametry vodního výměníku při spádu média 70/50 °C

Typ	Vzduchový výkon [m³/h]	Výkon ohřívače [kW]*	Teplota na výfuku ze clony [°C]	Průtok média [l/s]	Tlaková ztráta vody [kPa]
VCF-B-100-V-...	1691	15,9	40,4	0,1	6,2
VCF-B-150-V-...	2449	25,0	42,3	0,3	14,2
VCF-B-200-V-...	3381	34,0	41,9	0,4	12,4
VCF-B-250-V-...	4061	40,2	41,5	0,4	9,7

* Při teplotě nasávaného vzduchu +18 °C

Parametry vodního výměníku při spádu média 60/40 °C

Typ	Vzduchový výkon [m³/h]	Výkon ohřívače [kW]*	Teplota na výfuku ze clony [°C]	Průtok média [l/s]	Tlaková ztráta vody [kPa]
VCF-B-100-V-...	1691	11,8	34,6	0,1	4,1
VCF-B-150-V-...	2449	18,5	36,0	0,2	8,8
VCF-B-200-V-...	3381	25,2	35,7	0,3	8,1
VCF-B-250-V-...	4061	29,8	35,4	0,3	6,6

* Při teplotě nasávaného vzduchu +18 °C

PROFIL PROUDĚNÍ VZDUCHU PRO VCF-B EC MOTOR

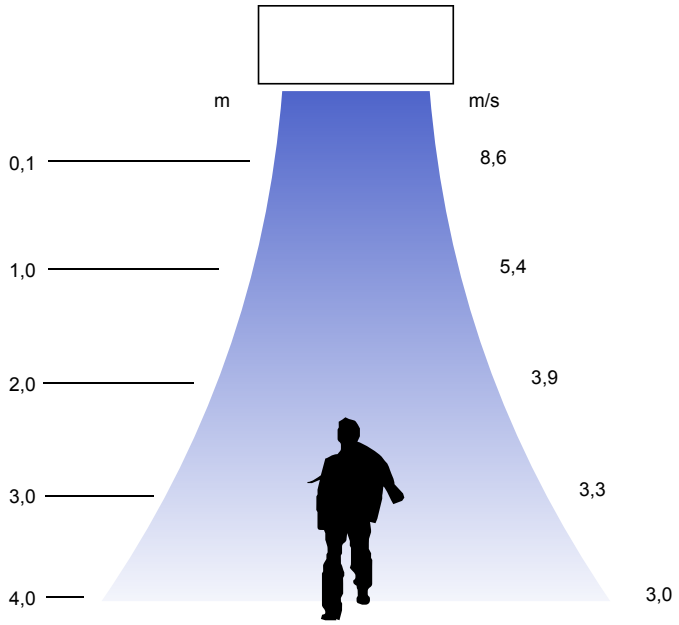

Práva na změny vyhrazena.

HLAVNÍ ČÁSTI

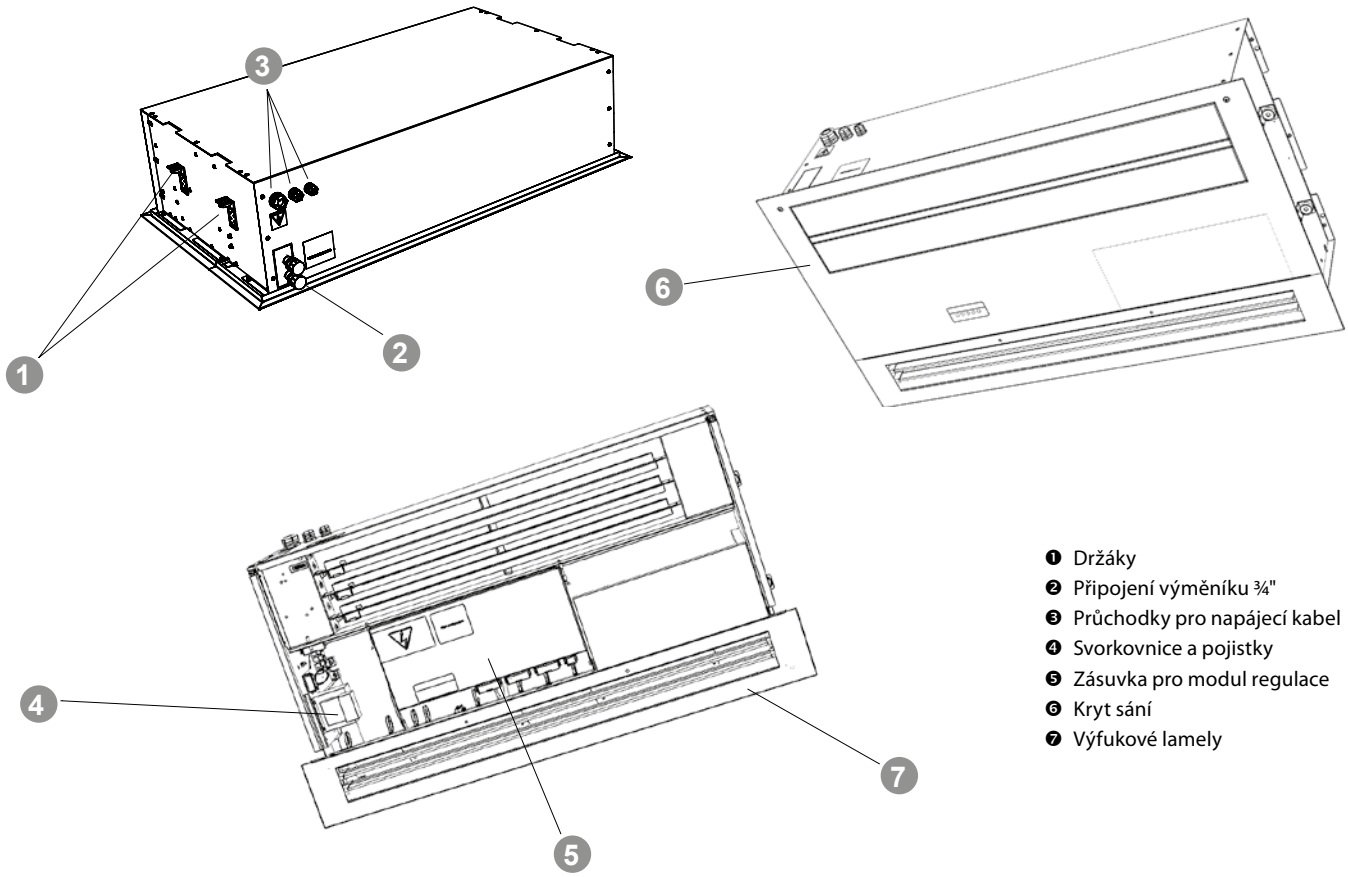

❶ Držáky
❷ Připojení výměníku ¾"
❸ Průchodky pro napájecí kabel
❹ Svorkovnice a pojistky
❺ Zásuvka pro modul regulace
❻ Kryt sání
❼ Výfukové lamely

ROZMĚRY

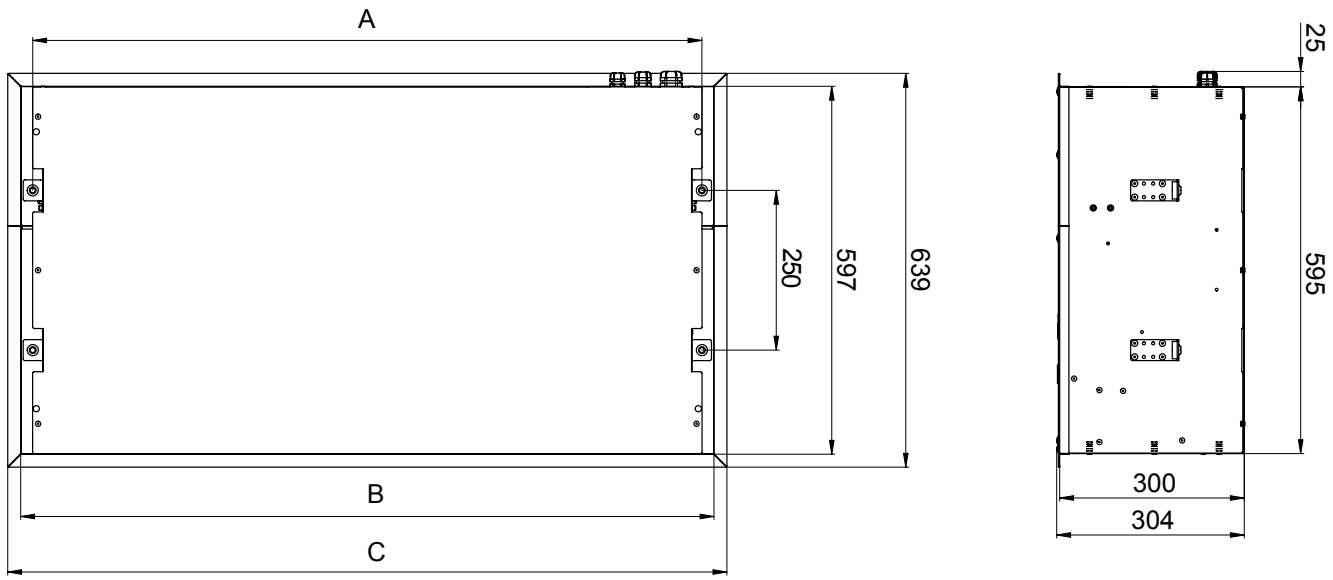

Typ	Rozměry [mm]			Doporučený clonící otvor [mm]
	A	B	C	
VCF-x-100-x-...	1085	1124	1166	1020
VCF-x-150-x-...	1585	1624	1666	1520
VCF-x-200-x-...	2085	2124	2166	2020
VCF-x-250-x-...	2465	2504	2546	2520

Připojovací rozměry vodního výměníku jsou ¾"

Práva na změny vyhrazena.

1

INSTALACE A MONTÁŽ

Vzduchová clona musí být instalována pouze v horizontální poloze!

- Vzduchová clona může být instalována nad dveřním otvorem. Pro hořlavé materiály musí být dodrženy všechny odstupové vzdálenosti
- Clona musí být provozována v suchých, vnitřních prostorách s okolní teplotou v rozmezí +5°C až +40°C a relativní vlhkostí do 80 %
- Vzduchová clona je navržena pro dopravu čistého vzduchu bez hořlavých a výbušných směsí, chemických výparů, hrubého prachu, sazí, mastnot, jedů, infekčních bakterií atd.
- Montážní poloha vzduchové clony může být přizpůsobena servisnímu krytu

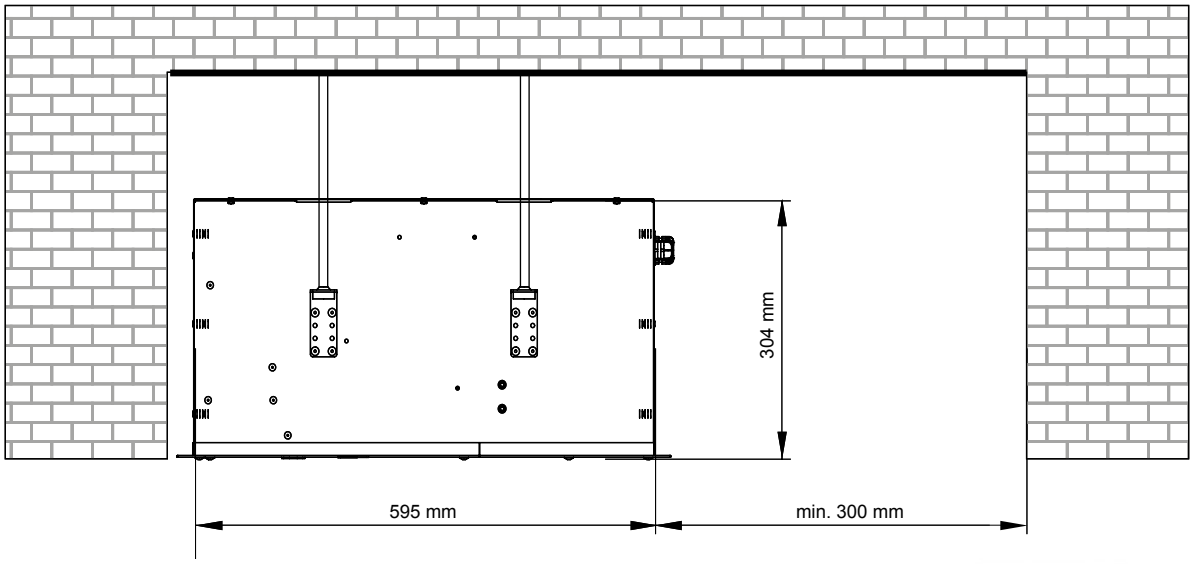

OVLÁDÁNÍ

Přehled funkcí a připojení čidel

		SUPERIOR VCS-R2-SU
	Ovládání	Dotykový panel
	Mód	Manuální / Automatický
	Regulace vzduchového výkonu	10 rychlostí (EC motory)
	Regulace výkonu elektrického ohřívače	ANO (PWM)**
	Regulace výkonu vodního ohřívače	0 – 10 V
	Protimrazová ochrana vodních výměníků LPHW	ANO
	Možnost připojení dveřního kontaktu	ANO (12 V)
	Externí spínač	ANO
	Měření teploty	ANO (NTC)**
	Řetězení vzduchových clon	ANO – max 10 + 1 ks
	Indikace chodu	ANO (Display)
	Připojení ovládacího panelu k regulaci	Komunikační kabel (UTP)
	Chod clony při zavřených dveřích	ANO
	BMS připojení	Modbus RTU, Modbus TCP
	Error kontakt	ANO
	Možnost připojení druhého ovládacího panelu	ANO

* PWM (Pulse Width Modulation), pulzní šířková modulace, plynulý náběh
** Teplotní čidlo součástí ve standardu. Teplota se zobrazuje na display

Práva na změny vyhrazena.

PŘÍKLAD ŘETĚZENÍ CLON

SUPERIOR

AKTIVNÍ DVEŘNÍ KONTAKT

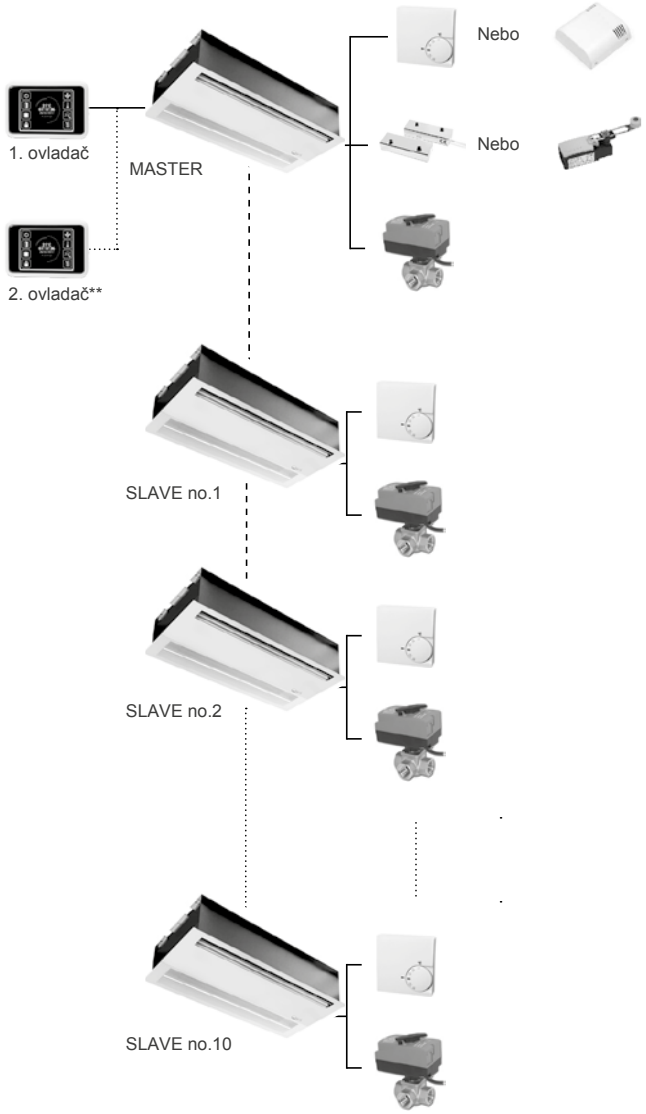

SUPERIOR

NEAKTIVNÍ DVEŘNÍ KONTAKT

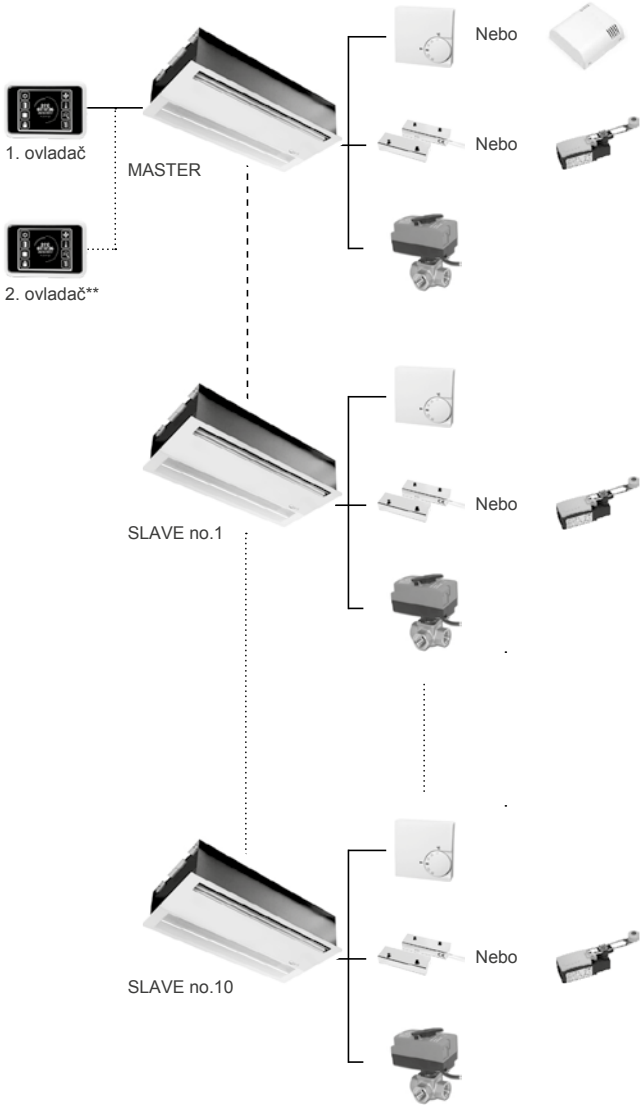

** Druhý ovladač jako volitelné příslušenství

1

PŘÍSLUŠENSTVÍ

VOLITELNÉ PŘÍSLUŠENSTVÍ

Termostatický ventil TV1-1/1
Příslušenství k modulu regulace typ SUPERIOR

Třícestný zónový ventil (0 – 10 V) ZV-3-24V
Příslušenství k modulu regulace typ SUPERIOR

Směšovací uzel
SMU2-024-xx
Příslušenství k modulu regulace typ SUPERIOR

Pokojový termostat TER-P

Prostorové teplotní čidlo CT-ROOM

Druhý ovládací panel
ND-REMOTE-CONTROL

Stěnová konzole
Konzole je určena pro montáž na stěnu
1 – Konzole
2 – Závěsný pás
3 – Zajišťovací šroub

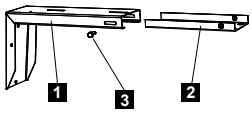

VCS4-KONZ-STE

VCS4-KONZ-STE – Stěnová konzole (set 2 ks)

Stropní konzole
Konzole slouží pro upevnění vzduchové clony na strop
1 – Stropní držák
2 – Závěsný pás
3 – Zajišťovací šroub

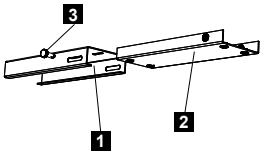

VCS4-KONZ-STR

VCS4-KONZ-STR – Stropní konzole (set 2 ks)

Značka EXIT
Vhodné pro všechny typy clon.
VCS4-EXIT

Mechanický dveřní spínač (230 V) DS-2

Magnetický dveřní kontakt (12 V) DK1

Magnetický dveřní kontakt (12 V) DK-B-3
v kovovém pouzdře s vyšší ochranou proti mechanickému poškození

Ohebná nerezová připojovací hadice,
délka 500 mm
OH-02-3/4-500

Práva na změny vyhrazena.

SCHÉMA ZAPOJENÍ

Doporučené průřezy vodičů jsou uvedeny v návodu k použití.

Veškerá schémata uvedená v katalogovém listu jsou pouze informativní. Při montáži je nutno se striktně řídit štítky a schématy přiloženými k výrobku.

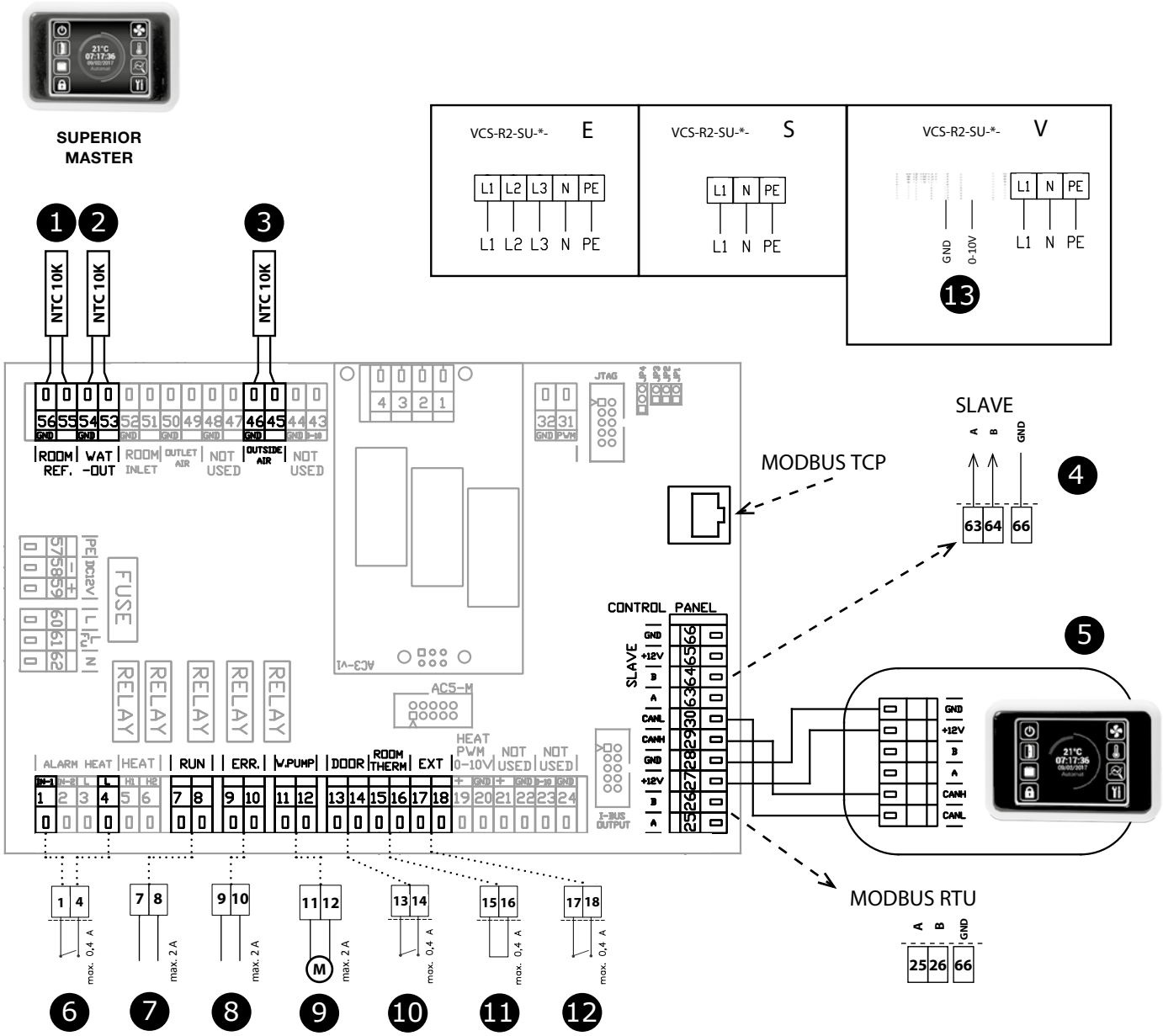

1	Prostorové teplotní čidlo (příslušenství)
2	Čidlo LPHW vodního výměníku (součást balení)
3	Čidlo venkovní teploty (součást balení)
4	Připojení pro SLAVE jednotku
5	Ovládací panel
6	Protimrazový termostat (NC)
7	RUN kontakt (relé kontakt, NO/NC)

8	ERROR kontakt (relé kontakt, NO/NC)
9	Vodní čerpadlo (relé kontakt)
10	DOOR dveřní kontakt (vstup, NO/NC)
11	Room termostat, pokojový termostat (vstup, NO/NC)
12	Externí ovládání (vstup, ON/OFF)
13	Řízení vodního ventilu (0 – 10 V)

Práva na změny vyhrazena.

1

SUPERIOR
SLAVE

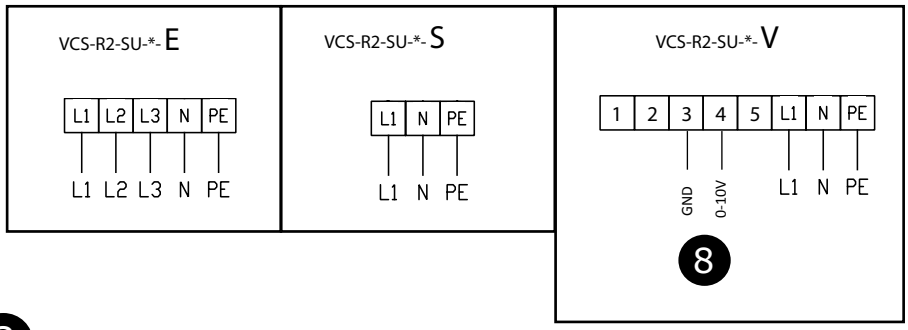

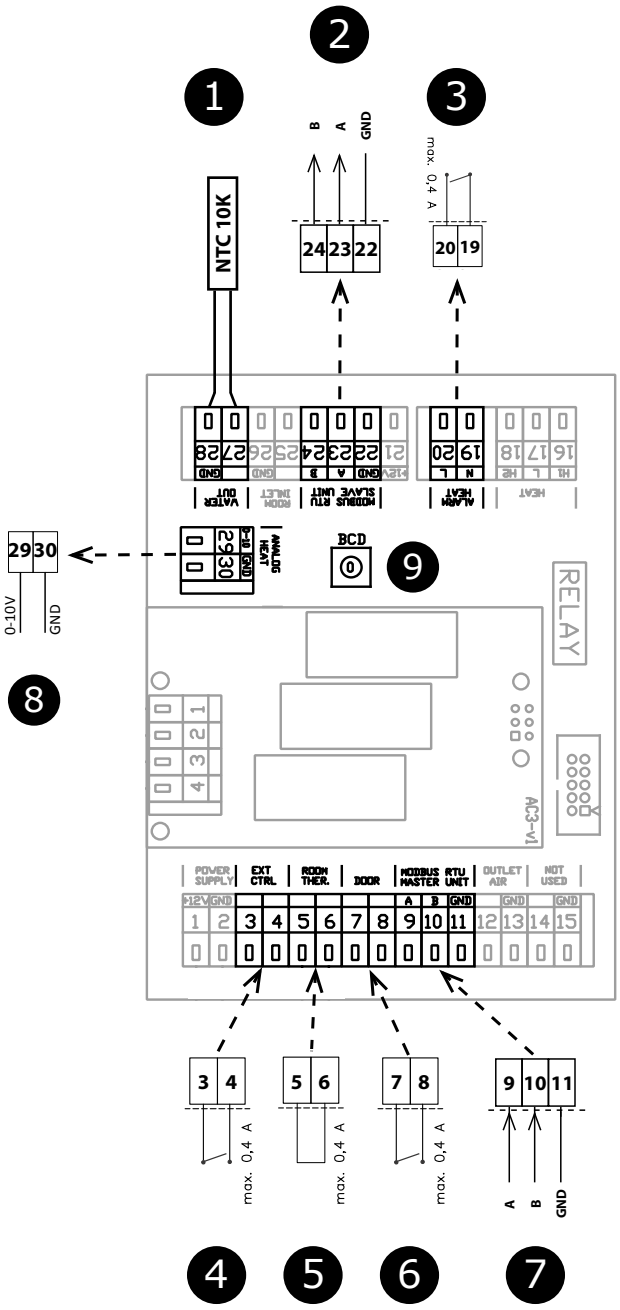

9

SLAVE	BCD
1	1
2	2
3	3
4	4
5	5
6	6
7	7
8	8
9	9
10	A

1	Čidlo LPHW vodního výměníku (součást balení)
2	Připojení pro SLAVE jednotku
3	Protimrazový termostat (NC)
4	Externí ovládání (vstup, ON/OFF)
5	Room termostat, pokojový termostat(vstup)
6	DOOR dveřní kontakt (vstup)
7	Řídící signál od MASTER jednotky
8	Řízení vodního ventilu (0 – 10 V)

Práva na změny vyhrazena.

ŘETĚZENÍ

SUPERIOR

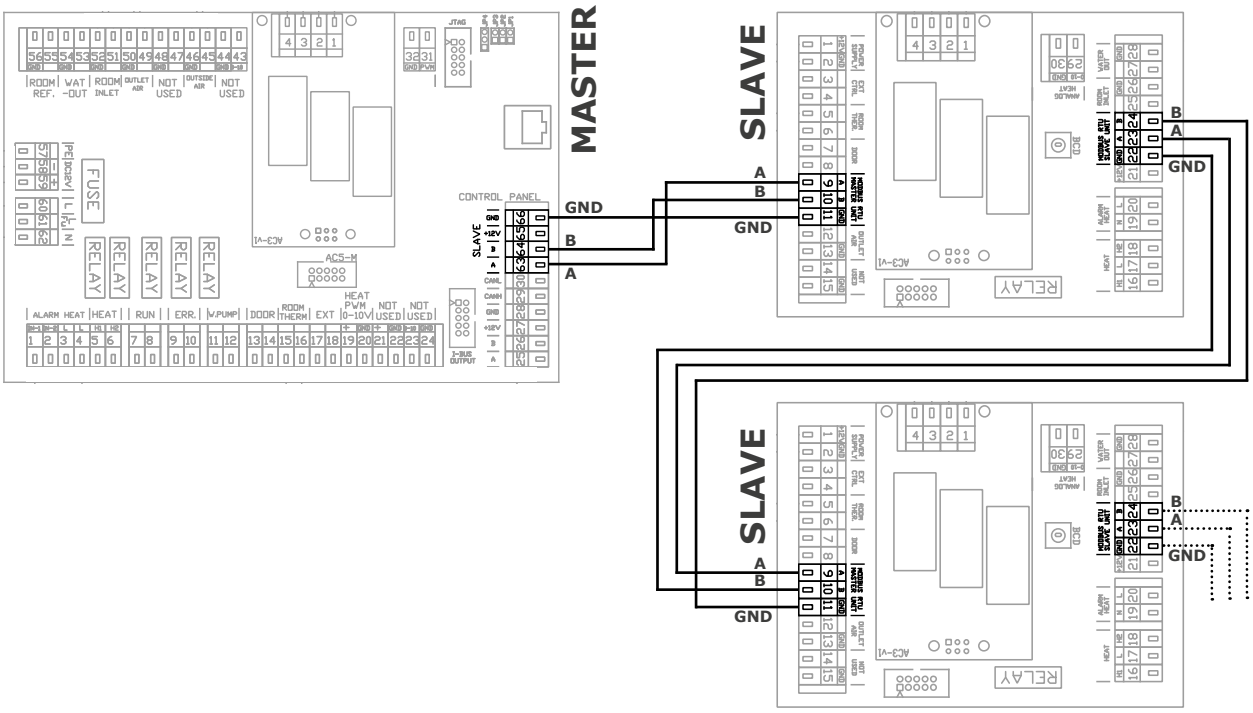

PŘÍKLAD ZNAČENÍ

VCF-B-100-E-SU-EC

- **EC** – EC motor
- **SU** – Regulace SUPERIOR Master
- **SS** – Regulace SUPERIOR Master
- **S** – Bez ohřevu
- **E** – Elektrický 3. fázový ohřívač
- **V** – Vodní ohřívač
- **100** – Délka 1 m
- **150** – Délka 1,5 m
- **200** – Délka 2 m
- **250** – Délka 2,5 m
- **B** – Výkonová řada
- **VCF** – Vzduchová clona FINESSE

Práva na změny vyhrazena.

Rectangular straight silencer SLRS

Description

Rectangular straight silencer from the Aerodim™ series. SLRS is built with the Aerodim™ silencer splitter SLRA. The SLRA is manufactured with a frame of galvanized sheet and absorption material type Lindtec™. The splitter is available in a width of 200 mm. Silencer is equipped with flange profile RJFP or LS.
Due to the aerodynamic design, the SLRS has a low pressure loss and a low generation of flow noise. To calculate the silencer, you can use our IT-program lindQST or DIMsilencer, where splitter distance, length and height can be optimized for the best performance.
Tested according to ISO 7235 standard.
SLRS is tested with the whole Lindab smoke evacuation system according to EN 1366-9.

Dimensions

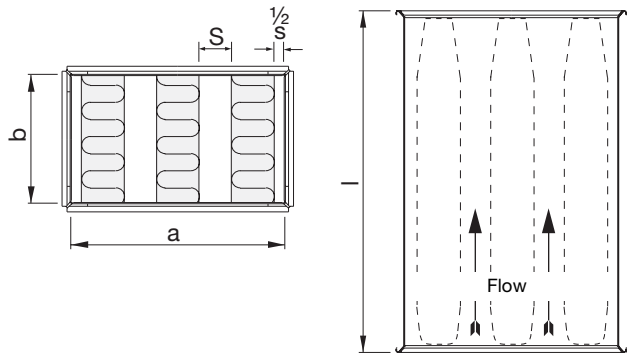

* See how to calculate (S) from a given (a) in the seperate AeroDim-SLRA-SLRS installations instruction page 4.

Order code

Product	SLRS	200	bbb*	cccc	dddd	aaaa	bb

Product
SLRS

Splitter width in mm
200 mm

Splitter distance (S) in mm
Calculate*

Width (a) in mm
Min. - Max. 400 - 2400 mm

Height (b) in mm
Min. - Max. 200 - 2400 mm

Length lnom i mm
MIn. - Max. 750 - 2550 mm

Connection type
e.g. RJFP or LS

Example: SLRS - 200 - 100 - 1200 - 900 - 1000 - RJFP

Technical data examples

Splitter distance S = 60

Length l_{nom} [mm]	Insertion loss [dB] for centre frequency [Hz] 63	125	250	500	1k	2k	4k	8k	Pressure value ξ
750	4	9	18	26	35	32	22	16	8,9
1350	6	15	31	46	50	50	36	25	12,0
1500	7	16	34	50	50	50	39	27	12,9
1950	9	21	44	50	50	50	48	32	15,2
2550	11	26	50	50	50	50	50	37	18,5

Splitter distance S = 80

Length l_{nom} [mm]	Insertion loss [dB] for centre frequency [Hz] 63	125	250	500	1k	2k	4k	8k	Pressure value ξ
750	3	7	15	23	30	27	18	14	4,9
1350	5	12	26	40	50	48	30	21	6,5
1500	5	14	29	44	50	50	32	22	6,9
1950	7	18	38	50	50	50	40	26	8,1
2550	8	22	47	50	50	50	49	31	9,6

Splitter distance S = 100

Length l_{nom} [mm]	Insertion loss [dB] for centre frequency [Hz] 63	125	250	500	1k	2k	4k	8k	Pressure value ξ
750	3	6	13	20	26	22	15	11	2,8
1350	4	11	23	36	50	40	24	17	3,8
1500	5	12	26	40	50	44	27	18	4,0
1905	6	15	33	50	50	50	33	22	4,7
2550	7	19	43	50	50	50	40	26	5,6

Splitter distance S = 120

Length l_{nom} [mm]	Insertion loss [dB] for centre frequency [Hz] 63	125	250	500	1k	2k	4k	8k	Pressure value ξ
750	2	6	12	19	23	18	12	9	1,8
1350	4	10	21	33	45	33	20	14	2,4
1500	4	11	23	36	50	36	22	15	2,5
1950	5	14	30	47	50	47	27	18	3,0
2550	6	18	39	50	50	50	33	22	3,5

Splitter distance S = 140

Length l_{nom} [mm]	Insertion loss [dB] for centre frequency [Hz] 63	125	250	500	1k	2k	4k	8k	Pressure value ξ
750	2	5	11	17	20	15	10	8	1,1
1350	3	9	19	30	39	27	17	12	1,5
1500	4	10	22	34	44	30	18	12	1,7
1950	4	12	28	44	50	38	22	15	2,0
2550	5	16	36	50	50	49	27	18	2,4

NB. Max. attenuation specified is 50 dB.

Standard lengths (l) : 750, 1350, 1500, 1950, 2550. (shown in table above).
Standard heights (b): 300, 600, 900, 1200,1800.
(Other lengths and heights are available. See min. - max. dimensions in order code. Note that you can exceed the max. dimensions by building together several SLRA/SLRS. See the AeroDim installation instruction for more details).

Special materials and sizes, please contact Lindab sales.

The pressure loss Δp in Pa can be calculated from the pressure value ξ: $\Delta p = 0{,}6 \times v2 \times \xi$, where (v) is the velocity on the face area of the silencer.

Rectangular straight silencer SLRS

Technical data

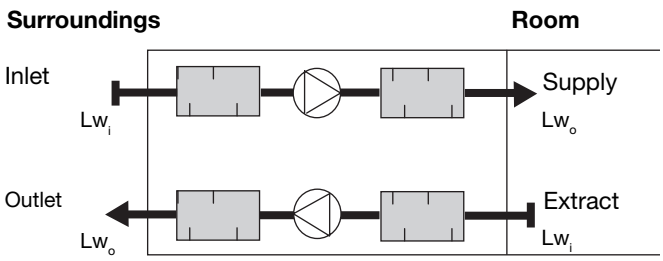

The flow noise and pressure loss is dependent on the velocity (v) on the face area(A) of the silencer.

However, the noise generated at the inlet of the silencer Lw$_i$ is higher than the noise generated at the outlet of the silencer Lw$_o$. It is therefore crucial to use the correct value depend on the placement of the silencer in the duct system, cf. drawing.

When calculating the silencer for:

- supply and outlet - use outlet noise Lw$_o$
- inlet and exhaust - use inlet noise Lw$_i$

Sound power level, inlet: Lw$_i$

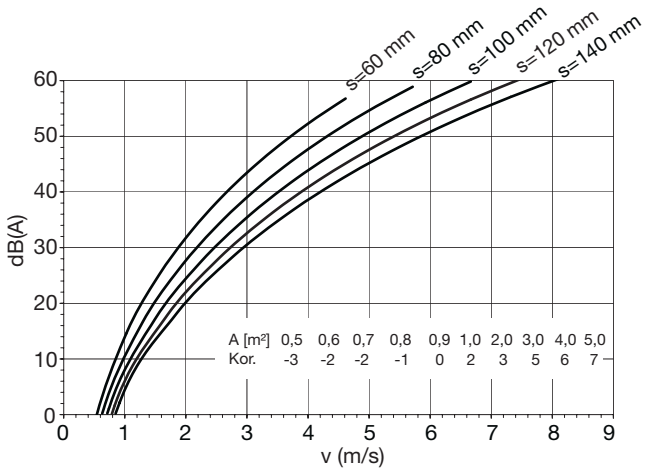

Sound power level, outlet: Lw$_o$

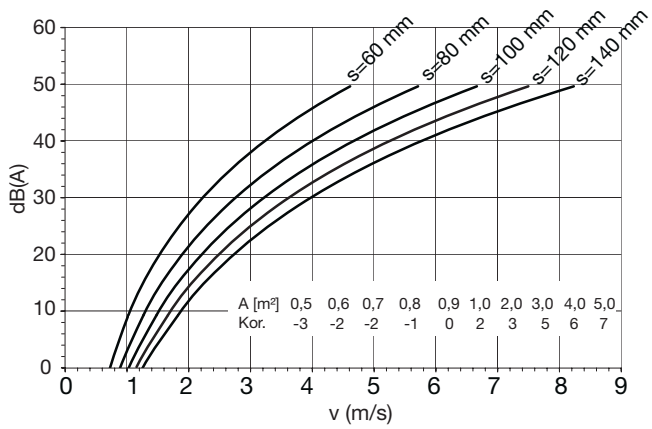

We reserve the right to make changes without prior notice
2018-12-20

Rectangular straight silencer SLRS

Pressure loss

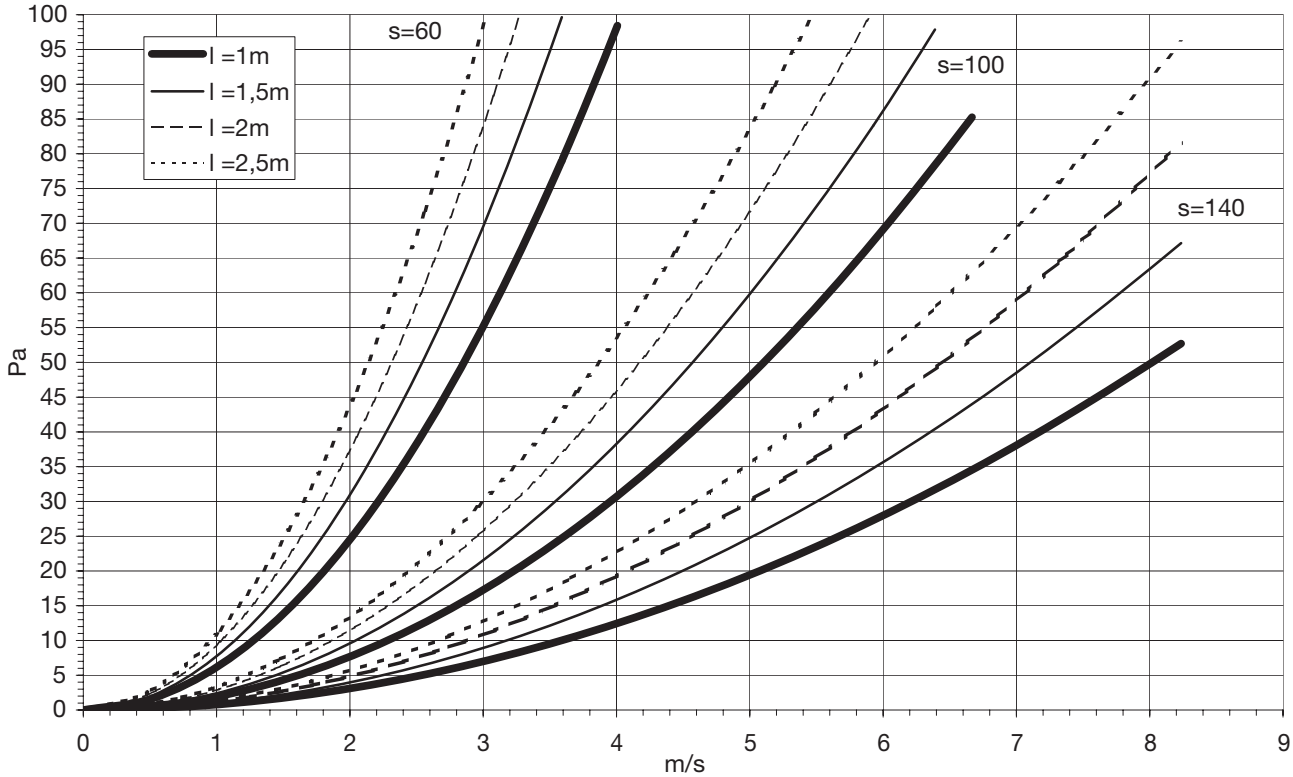

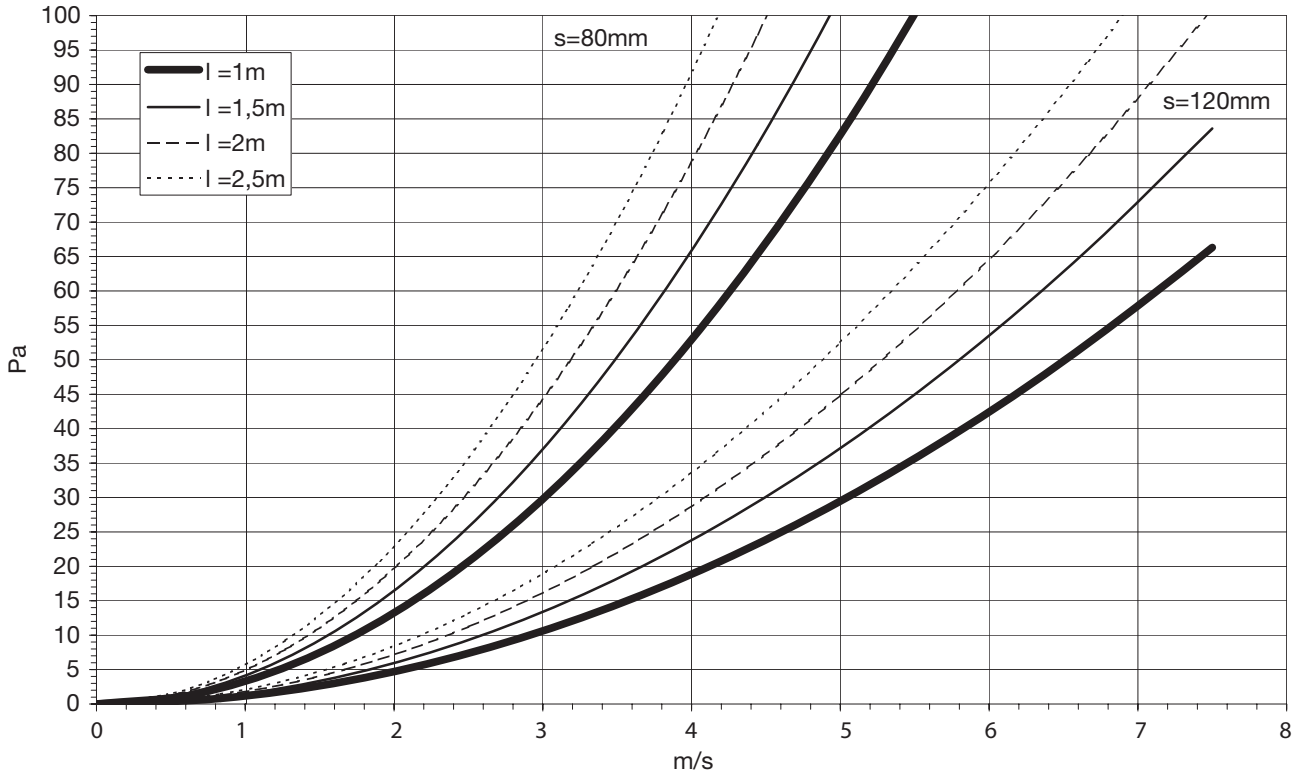

Rectangular straight silencer SLRS

Calculation example

Pressure loss and flow noise depend on the velocity on the face area of the silencer A.

This is illustrated in the following example:
SLRS 900x600 mm, Length 1.5 metre
3 splitters, distance 100 mm.

Flow = 7776 m^3/h = 2.16 m^3/s.
Area A = 0.9 m × 0.6 m = 0.54 m^2

$$\text{Face velocity} = \frac{2{,}16\ m^3/s}{0{,}54\ m^2} = 4\ m/s$$

Pressure loss:
Pressure loss = 39 Pa.

Flow noise from inlet:
Lw_i = 44 dB(A) -3 = 41 dB(A)
(-3 from area correction)

Flow noise from outlet:
From graph:
Lw_o = 36 dB(A) -3 = 33 dB(A)
(-3 from area correction)

Pressure loss

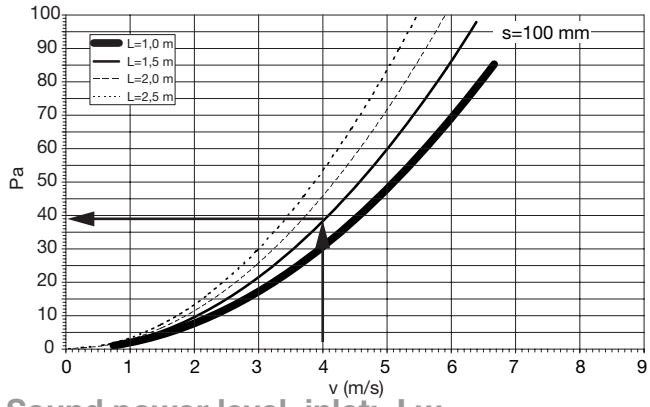

Sound power level, inlet: Lw_i

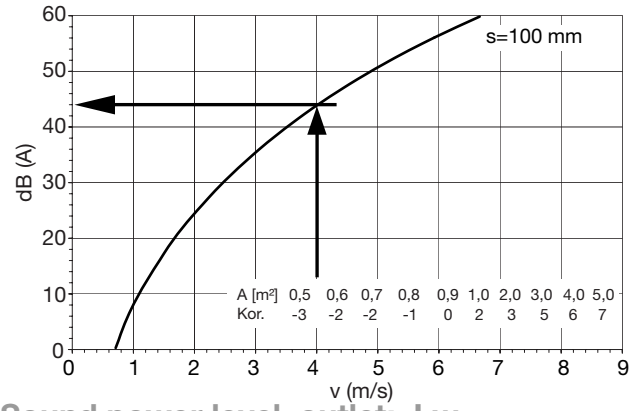

Sound power level, outlet: Lw_o

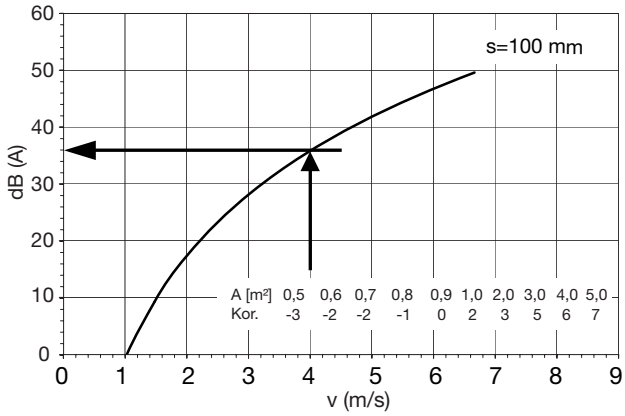

We reserve the right to make changes without prior notice
2018-12-20