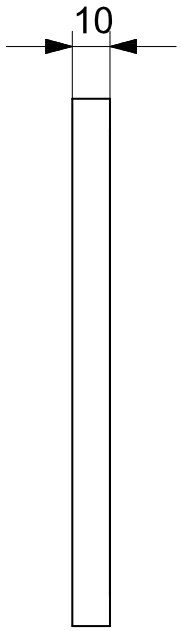


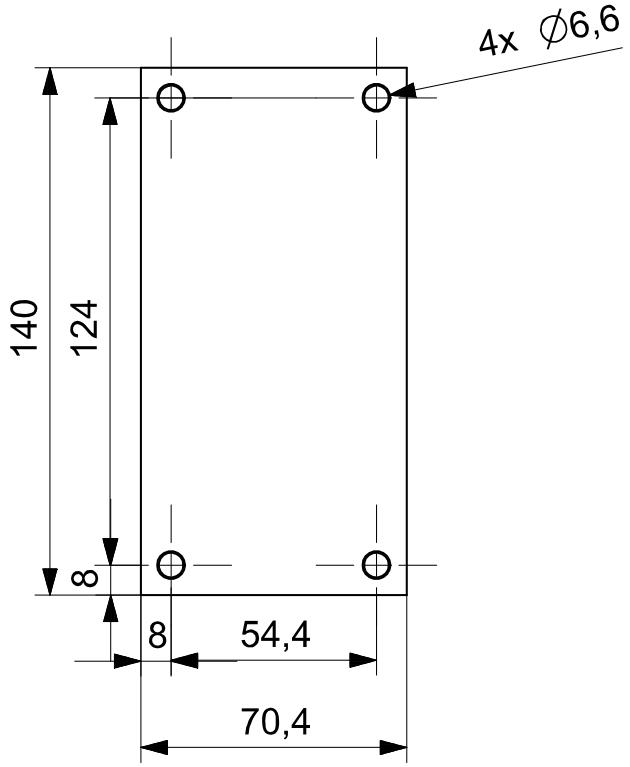


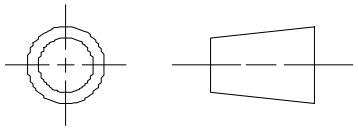

ALL DIMENSIONS IN MM

SIEMENS

THIS DRAWING HAS BEEN PRODUCED USING AN EXAMPLE TEMPLATE PROVIDED BY SIEMENS PLM SOFTWARE

| | |
|---|---|
| FIRST ISSUED | |
| DRAWN BY | Šimon Piksa |
| CHECKED BY | |
| APPROVED BY | |

TITLE

| SIZE | DRG NO. | SHEET REV |
|---|---|---|
| A4 | ucyhceni 1 V | A |

SCALE 1:1 | SHEET 1 OF 1

A4