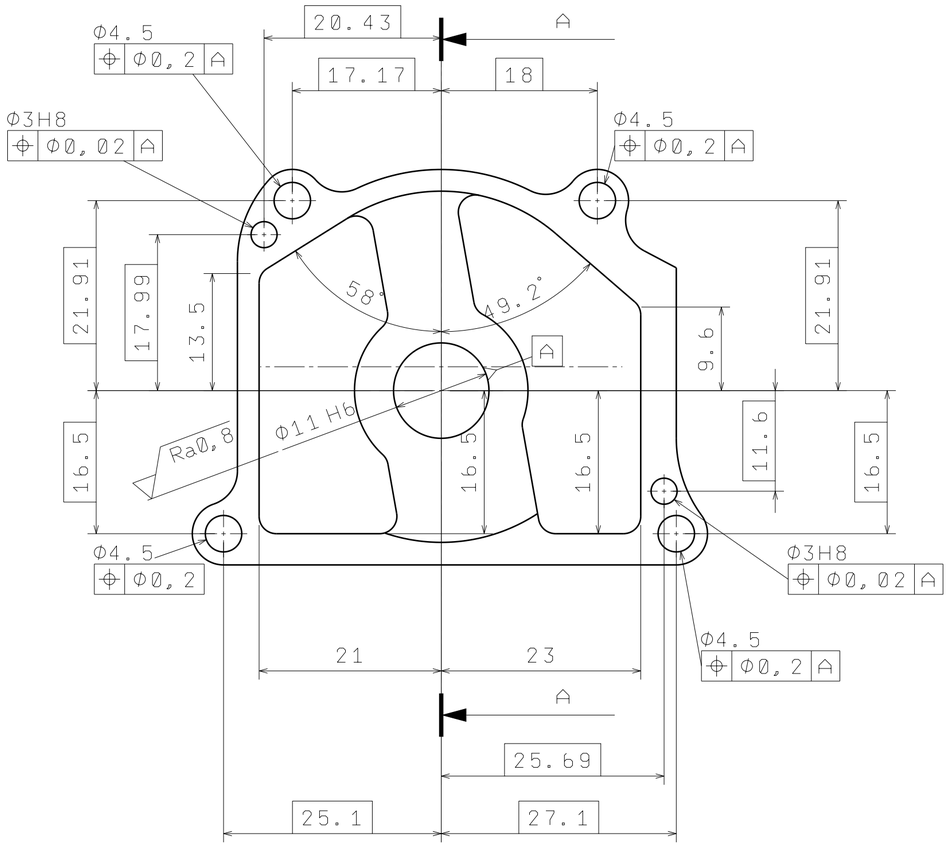

A-A (2:1)

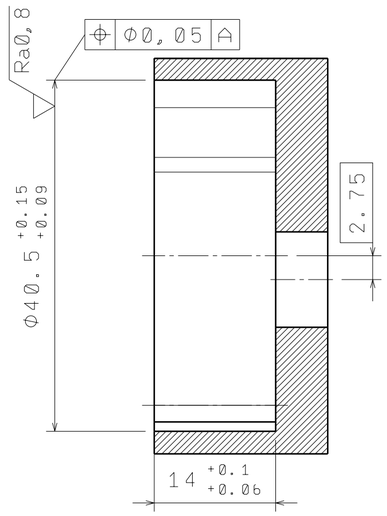

(2:1)

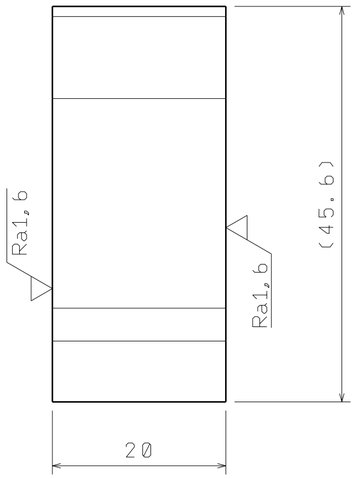

(2:1)

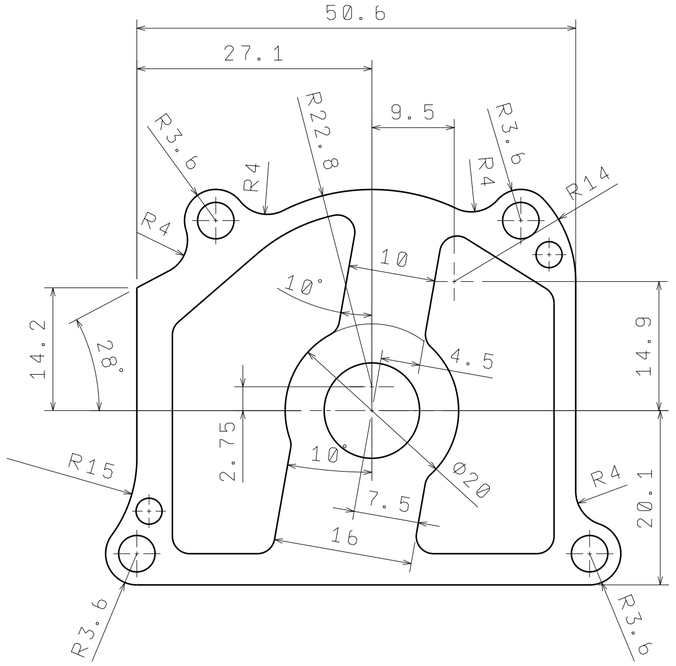

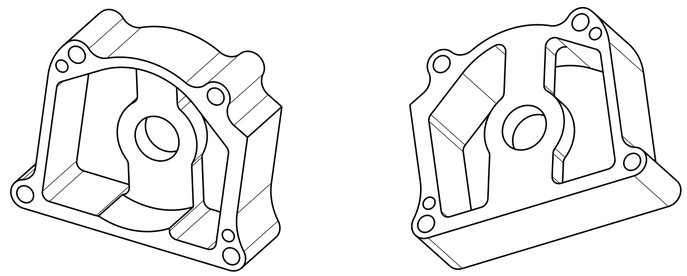

Neoznacene radiusy R2

Povrchova uprava aplikaci DLC povlaku

Ra3,2 (Ra0,8 Ra1,6)

MATERIAL: EN AW 7075							
SEMI-PRODUCT 4HR 80x50-25							
PROJECTION: [ISO E]							
ACCURACY ISO 8015: ISO8015							
TOLERATION ISO 2768 - mK			INDEX	ZMNA		DATUM	PODPIS
	NAME:	DATE		SIGNATURE	DATE	SCALE:	2:1
DRAWN	URBAN	14.1.2015	NORM. REF.			WEIGHT 0,043 kg	
CHECKED			APPROVED			ASSEMBLY	BOM:

CZECH TECHNICAL UNIVERSITY IN PRAGUE

CTU CARTECH

PRODUCT DESIGNATION:

SC GEOROTOR HOUSING

PRODUCT NUMBER

FS07-15-033-PT-00402-AA

LIST 1 LIST