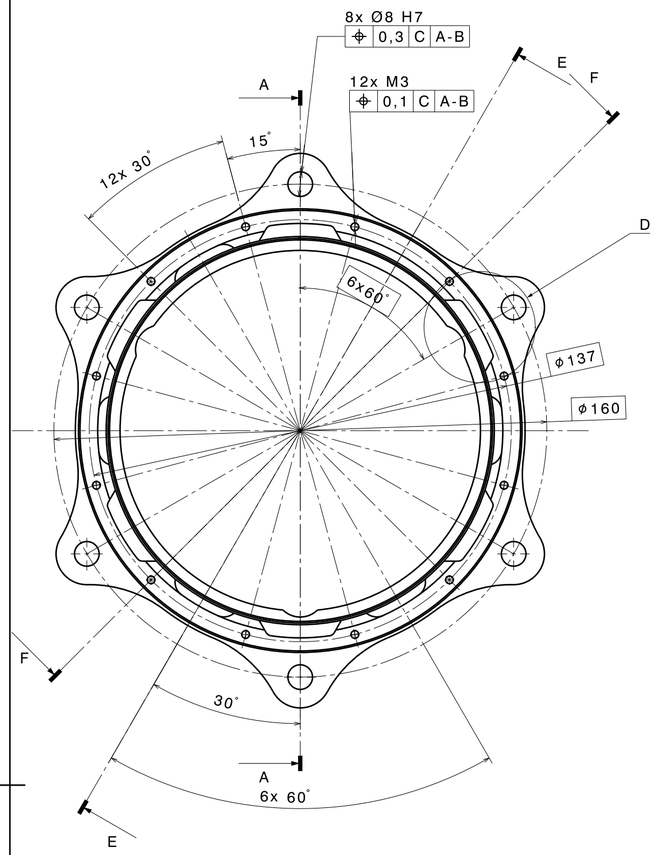

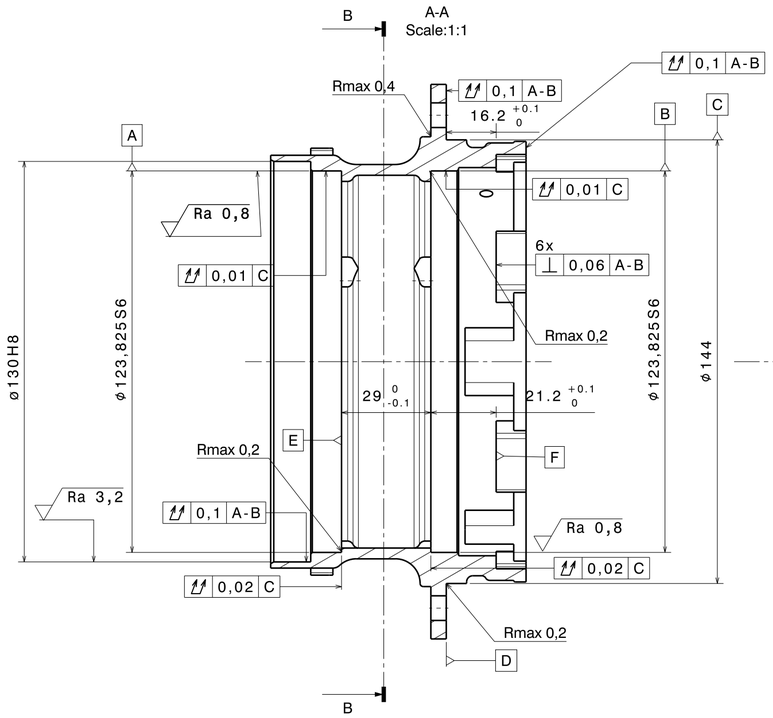

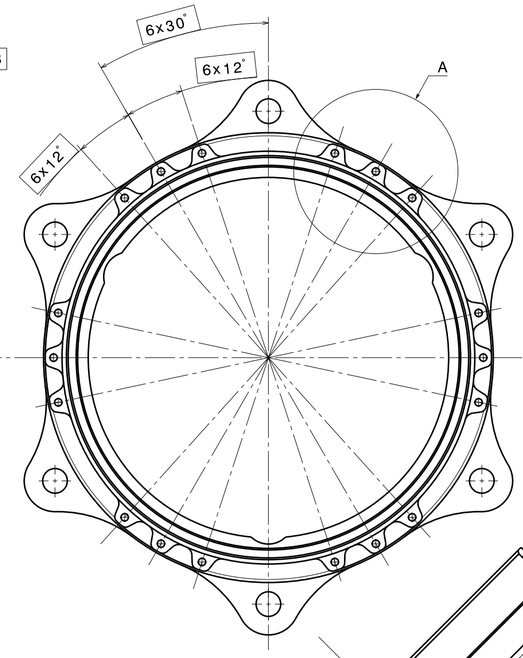

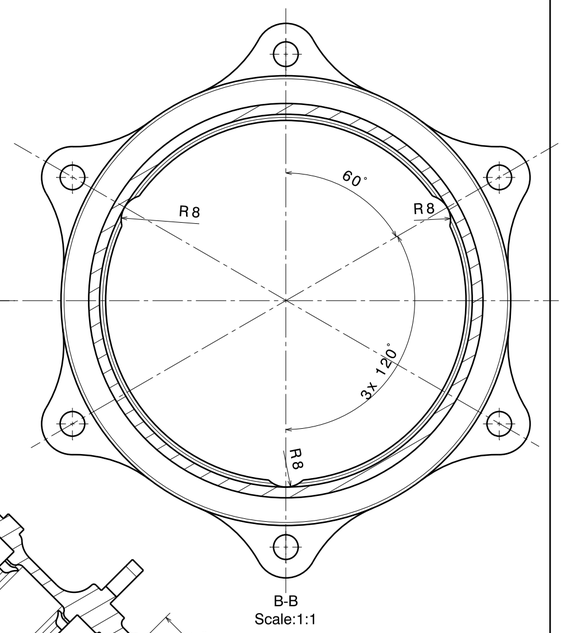

B-B
Scale:1:1

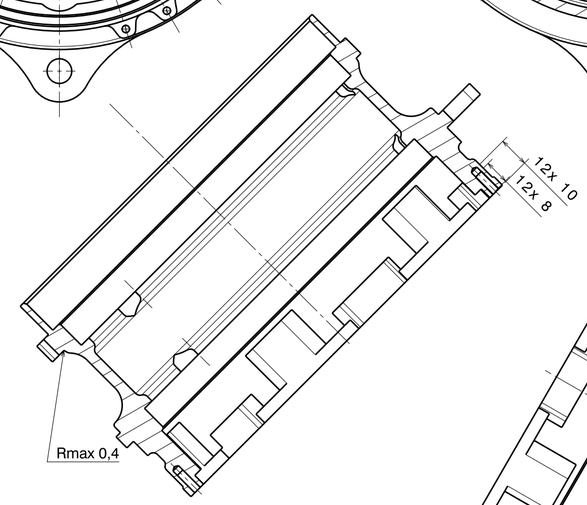

F-F
Scale:1:1

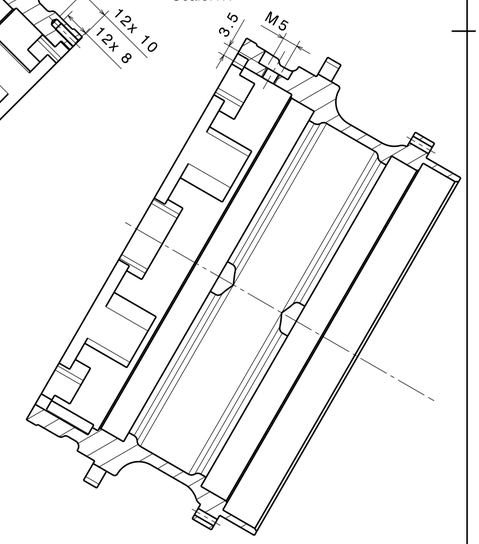

E-E
Scale:1:1

Scale:A
5:1

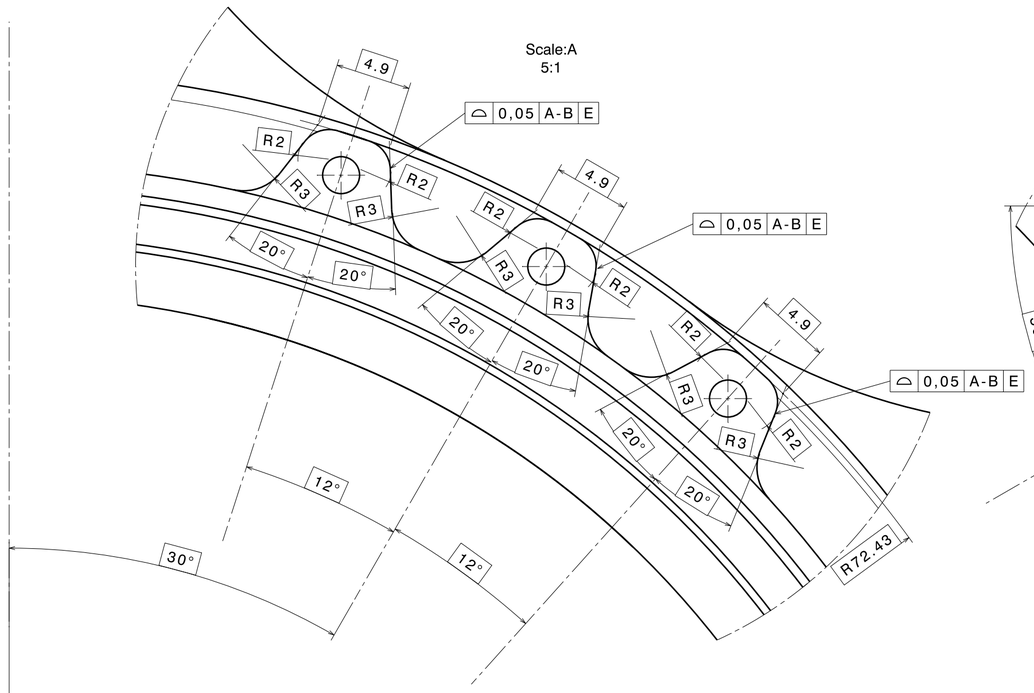

Detail D
Scale:5:1

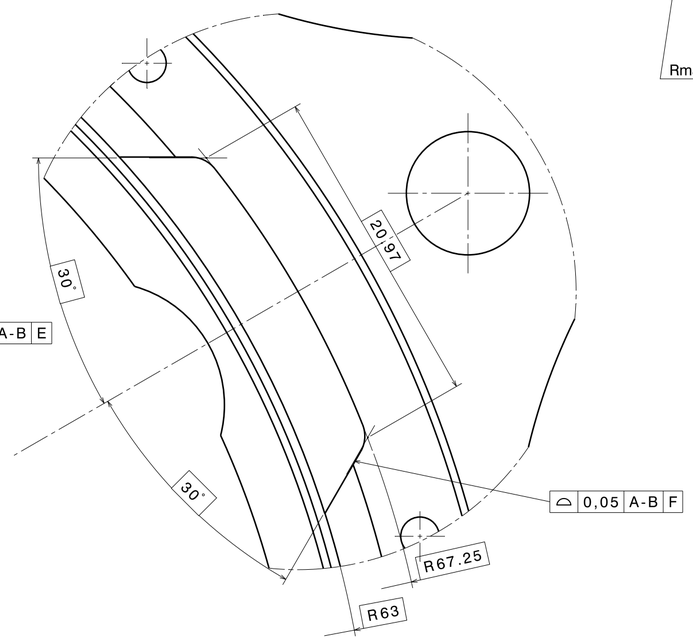

Neoznacene rozmery podle 3D modelu

Ra 3,2 (Ra 0,8)

MATERIAL: EN AW 7075 T6							
SEMI-PRODUCT TYC KRUHOVA 200x105							
PROJECTION: (ISO E)							
ACCURACY ISO 8015: ISO8015							
TOLERATION ISO 2768 - mK				INDEX	ZM NA	DATUM	POOPIS
	NAME:	DATE	SIGNATURE	DATE		SCALE:	1:1
DRAWN	Michal Boucek	11.01.2024	NORM. REF.		WEIGHT WEIGHT kg		
CHECKED			APPROVED		ASSEMBLY Assembly	BOM:	BOM CTU24

CZECH TECHNICAL UNIVERSITY IN PRAGUE

PRODUCT DESIGNATION:
Wheel Hub

PRODUCT NUMBER:
CTU-24-DT-WHUB-03

LIST:1/1